DUCTWORK SEISMIC SUPPORT NOTES:

1. PER ASCE STANDARD 7–16 SEISMIC SUPPORTS ARE NOT REQUIRED FOR THE FOLLOWING CONDITIONS:

   1.1. HVAC DUCTS ARE SUSPENDED WITH HANGERS 12" OR LESS IN LENGTH.

   1.2. HVAC DUCTS HAVE A CROSS–SECTIONAL AREA OF LESS THAN 6 SQUARE FEET.

2. IF INSTANCES OCCUR WHERE HVAC DUCT IS SUSPENDED WITH HANGERS GREATER THAN 12" IN LENGTH AND HVAC DUCT HAS A CROSS–SECTIONAL AREA GREATER THAN 6 SQUARE FEET SYSTEM CONNECTORS AND COMPONENTS SHALL BE COMPATIBLE AND DESIGNED FOR THE APPLICATION THAT THEY ARE USED FOR. SHALL HAVE A MINIMUM OF TWO TRANSVERSE BRACES PER STRAIGHT DUCT RUN WITH A MAXIMUM DISTANCE OF 30' BETWEEN TRANSVERSE BRACES. SHALL HAVE A MINIMUM OF ONE LONGITUDINAL BRACE PER STRAIGHT DUCT RUN WITH A MAXIMUM DISTANCE OF 40' BETWEEN LONGITUDINAL BRACES. BRACING SHALL ONLY OCCUR AT OR NEAR AREAS WHERE SUFFICIENT DUCT STIFFNESS IS PRESENT (AT OR NEAR JOINT CONNECTIONS).

3. FOR SEISMIC BRACING OF MECHANICAL EQUIPMENT AN INDEPENDENT SEISMIC AND VIBRATION CONTROL SUBCONTRACTOR WITH EXPERIENCE, COMPUTING CAPABILITIES, AND MANUFACTURED PRODUCTS SHALL BE FURNISHED BY MECHANICAL CONTRACTOR. INDEPENDENT SEISMIC CONSULTANT SHALL PROVIDE REQUIRED COMPUTATIONS, SHOP DRAWINGS, AND MANUFACTURED PRODUCTS TO MEET THE MINIMUM REQUIREMENTS OF ASCE 7–10 AND INTERNATIONAL BUILDING CODES (LATEST ADOPTED EDITION) FOR THE RESPECTIVE SEISMIC DESIGN FOR SEISMIC ZONE WITH IMPORTANCE FACTOR 1.5. SEISMIC SUBCONTRACTOR SHALL EXERCISE THE QUALITY CONTROL FOR THIS WORK AND SHALL NOT BE LIMITED TO INSTRUCTIONS DIRECTED TO THE MECHANICAL CONTRACTOR. THE SEISMIC SUBCONTRACTOR SHALL CERTIFY IN WRITING THAT THEY HAVE INSPECTED THE INSTALLATION AND THAT ALL ISOLATION ANCHORS AND SEISMIC RESTRAINT MATERIALS ARE INSTALLED CORRECTLY AND FUNCTIONING PROPERLY. CERTIFICATION SHALL BE PROVIDED AFTER ALL CORRECTIVE WORK HAS BEEN COMPLETED.

COMMISSIONING NOTES:

MECHANICAL CONTRACTOR SHALL BE RESPONSIBLE TO PROVIDE ALL DOCUMENTATION TO THE OWNER AS PER THE LISTED 2018 IECC CODE REFERENCES BELOW:

C408.2.1 A COMMISSIONING PLAN SHALL BE DEVELOPED BY A REGISTERED DESIGN PROFESSIONAL OR APPROVED AGENCY AND SHALL INCLUDE THE FOLLOWING ITEMS:

1. A NARRATIVE DESCRIPTION OF THE ACTIVITIES THAT WILL BE ACCOMPLISHED DURING EACH PHASE OF COMMISSIONING, INCLUDING THE PERSONNEL INTENDED TO ACCOMPLISH EACH OF THE ACTIVITIES.
2. A LISTING OF THE SPECIFIC EQUIPMENT, APPLIANCES OR SYSTEMS TO BE TESTED AND A DESCRIPTION OF THE TESTS TO BE PERFORMED.
3. FUNCTIONS TO BE TESTED, INCLUDING, BUT NOT LIMITED TO CALIBRATIONS AND ECONOMIZER CONTROLS.
4. CONDITIONS UNDER WHICH THE TESTS WILL BE PERFORMED. AT A MINIMUM, TESTING SHALL AFFIRM WINTER AND SUMMER DESIGN CONDITIONS AND FULL OUTSIDE AIR CONDITIONS.
5. MEASURABLE CRITERIA FOR PERFORMANCE.

C408.2.4 PRELIMINARY COMMISSIONING REPORT. A PRELIMINARY REPORT OF COMMISSIONING TEST PROCEDURES AND RESULTS SHALL BE COMPLETED AND CERTIFIED BY THE REGISTERED DESIGN PROFESSIONAL OR APPROVED AGENCY AND PROVIDED TO THE BUILDING OWNER OR OWNER'S AUTHORIZED AGENT. THE REPORT SHALL BE ORGANIZED WITH MECHANICAL AND SERVICE HOT WATER FINDINGS IN SEPARATE SECTIONS TO ALLOW INDEPENDENT REVIEW. THE REPORT SHALL BE IDENTIFIED AS "PRELIMINARY COMMISSIONING REPORT," SHALL INCLUDE THE COMPLETED COMMISSIONING COMPLIANCE CHECKLIST, FIGURE C408.2.4, AND SHALL IDENTIFY:

1. ITEMIZATION OF DEFICIENCIES FOUND DURING TESTING REQUIRED BY THIS SECTION THAT HAVE NOT BEEN CORRECTED AT THE TIME OF REPORT PREPARATION.
2. DEFERRED TESTS THAT CANNOT BE PERFORMED AT THE TIME OF REPORT PREPARATION BECAUSE OF CLIMATIC CONDITIONS.
3. CLIMATIC CONDITIONS REQUIRED FOR PERFORMANCE OF THE DEFERRED TESTS.
4. RESULTS OF FUNCTIONAL PERFORMANCE TESTS.
5. FUNCTIONAL PERFORMANCE TEST PROCEDURES USED DURING THE COMMISSIONING PROCESS, INCLUDING MEASURABLE CRITERIA FOR TEST ACCEPTANCE.

C408.2.4.1 ACCEPTANCE OF REPORT. BUILDINGS, OR PORTIONS THEREOF, SHALL NOT BE CONSIDERED AS ACCEPTABLE FOR A FINAL INSPECTION PURSUANT TO SECTION C105.2.6 UNTIL THE CODE OFFICIAL HAS RECEIVED THE PRELIMINARY COMMISSIONING REPORT FROM THE BUILDING OWNER OR OWNER'S AUTHORIZED AGENT.

C408.2.4.2 THE CODE OFFICIAL SHALL BE PERMITTED TO REQUIRE THAT A COPY OF THE PRELIMINARY COMMISSIONING REPORT BE MADE AVAILABLE FOR REVIEW BY THE CODE OFFICIAL.

C408.2.5 DOCUMENTATION REQUIREMENTS. THE CONSTRUCTION DOCUMENTS SHALL SPECIFY THAT THE DOCUMENTS DESCRIBED IN THIS SECTION BE PROVIDED TO THE BUILDING OWNER WITHIN 90 DAYS OF THE RECEIPT OF THE CERTIFICATE OF OCCUPANCY.

DOCUMENTS SHALL INCLUDED BUT ARE NOT LIMITED TO: DRAWINGS, MANUALS, SYSTEM BALANCING REPORT, AND FINAL COMMISSIONING REPORT.

PROJECT MECHANICAL NOTES:

1. MECHANICAL CONTRACTOR TO PROVIDE AND INSTALL A 7–DAY PROGRAMMABLE THERMOSTAT FOR EACH FAN COIL (PROVIDE PAIRING KIT AS REQUIRED) AND ROOF TOP UNIT. VERIFY THERMOSTAT LOCATION WITH OWNER REPRESENTATIVE IN FIELD. INSTALL THERMOSTAT AT 48" A.F.F.. PROVIDE AND INSTALL A HEAVY DUTY VANDAL RESISTANT COVER IN ALL COMMON AREAS.
2. COORDINATE EXACT LOCATION OF ALL NEW AND EXISTING MECHANICAL UNITS WITH GENERAL CONTRACTOR. VERIFY IN FIELD.
3. PROVIDE AND INSTALL OUTSIDE AIR AS SPECIFIED ON THE PLANS. SEE TYPICAL OUTSIDE AIR DETAIL FOR FAN COILS. RTU'S WILL BE VIA ECONOMIZER.
4. PROVIDE AND INSTALL ALL NECESSARY COMPONENTS FOR FAN COIL/HEAT PUMP UNIT SYSTEMS. (IE REFRIGERANT LINES, CONDENSATE PIPING, FILTER GRILLE(S), ACCESS PANELS (FIRE RATED AS REQUIRED), MOUNTING/SUPPORT HARDWARE, ETC.) ALL PER MANUFACTURERS RECOMMENDATIONS.
5. PROVIDE AND INSTALL MANUAL CONTROL DAMPERS AT EACH BRANCH TAKE–OFF. EACH SUPPLY AIR GRILLE SHALL BE DOWNSTREAM FROM A CONTROL DAMPER FOR BALANCING AND ADJUSTMENT. SOME INSTALLATIONS MAY REQUIRE OPPOSED BLADE DAMPERS OR CONCEALED DAMPER REGULATORS THAT ARE REMOTELY ADJUSTED.
6. PROVIDE AND INSTALL FIRE DAMPERS IN MECHANICAL DUCT WITH REQUIRED ACCESS DOORS AT ALL FIRE RATED ASSEMBLY PENETRATIONS. FIRE BARRIER IS AT GYP. BOARD. VERIFY AND COORDINATE ASSEMBLY AND BARRIER LOCATIONS WITH ARCHITECTURAL PLANS.
7. MECHANICAL CONTRACTOR TO PROVIDE DOCUMENTATION OF REQUIRED MANUFACTURER START–UP FOR EQUIPMENT INCLUDING MANUFACTURER, MODEL NUMBER, SERIAL NUMBER, COOLING CAPACITY, GAS HEATING INPUT, ALL ENTERING AND LEAVING TEMPERATURES, CONNECTED CIRCUIT VOLTAGE, AND VERIFICATION OF PROPER FUNCTION OF THERMOSTAT. CONTRACTOR SHALL PROVIDE MANUALS FOR EQUIPMENT AND NAME OF SERVICE AGENCY.
8. MECHANICAL CONTRACTOR TO PROVIDE AND INSTALL SINGLE THICKNESS TURNING VANES AT EACH 90 DEGREE SQUARE DUCT ELBOW.
9. USING CFM NOTED ON PLANS INSTALL GRILLES AND DIFFUSERS WITH MAXIMUM NOISE CRITERIA (NC) OF 25 FOR ALL PUBLIC/COMMON AREAS.
10. DUCTWORK SIZING, ROUTING, AND LOCATION TO BE FIELD VERIFIED AND APPROVED FOR ANY CHANGES TO THE DUCT SIZING AND/OR ROUTING PRIOR TO DUCT FABRICATION AND INSTALLATION.

MECHANICAL SYMBOLS

NOTES:
1. ALL SYMBOLS MAY NOT BE USED.
2. DOTTED SYMBOLS INDICATE EXISTING EQUIPMENT, ETC

SYMBOL	EXPLANATION
ø	ROUND MEASUREMENT
	RETURN AIR GRILLE/DUCT
	SUPPLY AIR DIFFUSER/DUCT
	EXHAUST AIR INTAKE GRILLE
	EXHAUST FAN
T X–X	THERMOSTAT/SENSOR
S X–X	SENSOR
X / Y	MECHANICAL EQUIPMENT SYMBOL
#	KEYED NOTE REFERENCE
NECK CFM / SIZE CFM TAG	NECK: NECK AND BRANCH DUCT SIZE. CFM: CFM OF DIFFUSER OR GRILLE. TAG: DIFFUSER OR GRILLE CALL–OUT.
	SUPPLY AIR DUCTWORK
	RETURN AIR DUCTWORK
	EXHAUST AIR DUCTWORK
	OUTSIDE AIR DUCTWORK
R/D	RADIATION DAMPER
F/D	FIRE/SMOKE DAMPER
	BALANCING DAMPER

SHEET INDEX

PROJECT MECHANICAL NOTES:

DUCTWORK FABRICATED PRIOR TO FIELD VERIFICATION AND APPROVALS THAT NEEDS TO BE ALTERED WILL BE ALTERED AS NEEDED BY THE CONTRACTOR WITH NO ADDITIONAL COST TO THE OWNER.

11. ALL FRESH/OUTSIDE AIR INTAKES SHALL BE 10 FEET MIN. FROM ALL EXHAUST & PLUMBING VENTS.
12. ALL RETURN AIR & SUPPLY AIR DUCTWORK IN UNCONDITIONED SPACES SHALL BE INSULATED PER APPLICABLE CODES.
13. ALL NEW EQUIPMENT SHALL HAVE A FLEXIBLE CONNECTION FOR THE RETURN AIR & SUPPLY AIR DUCTWORK. 6' MAXIMUM LENGTH RECOMMENDED. INSTALL PER MANUFACTURER'S RECOMMENDATIONS.
14. BALANCE ALL SYSTEMS TO CFM NOTED AT EACH DIFFUSER AND GRILLE BY AN INDEPENDENT BALANCING CONTRACTOR.
15. ALL GAS FIRED EQUIPMENT WILL BE TESTED BY CERTIFIED GAS INSTALLERS AND HAVE GREEN STICKERS STATING COMPLIANCE WITH ALL REQUIRED LOCAL AND 2018 IFGC REQUIREMENTS.
16. HEATING LOADS COMPLETED USING CHVAC OR OTHER APPROVED CALCULATION METHODS.
17. REFRIGERANT PIPING INSULATION.
    17.1. INSULATE ALL REFRIGERANT SUCTION PIPING WITH 1/2" THICK FLEXIBLE FOAMED PLASTIC CLOSED CELL PIPE INSULATION.
    17.2. INSULATION SHALL HAVE A "K" FACTOR OF NOT MORE THAN .26 AT 70°F AND A WATER VAPOR TRANSMISSION RATE OF 0.1 PERM–INCH OR LESS IN CONFORMANCE WITH ASTM C–177 & ASTM C–355 WATER METHOD.
    17.3. WHEN INSULATION IS EXPOSED TO SUNLIGHT WRAP WITH POLYTAPE WITH ONE THIRD OVERLAP.
    17.4. INSTALL INSULATION BY SLITTING TUBULAR SECTIONS AND APPLYING OVER PIPING.
    17.5. PAINT ALL INSULATION AND/OR TAPE EXPOSED TO THE EXTERIOR WITH ULTRAVIOLET RESISTING PAINT.
18. COORDINATE ALL RETURN AIR & SUPPLY AIR DUCTWORK AND DIFFUSERS IN FIELD WITH LIGHTING AND OTHER SYSTEMS.
19. COORDINATE ALL WORK WITH OTHER TRADES AS REQUIRED.
20. MECHANICAL CONTRACTOR SHALL TEST THE EXISTING AIR HANDLER(S) FOR PROPER OPERATION. INFORM THE GENERAL CONTRACTOR/OWNER'S REPRESENTATIVE OF ANY PROBLEMS OR CONCERNS.
21. MECHANICAL CONTRACTOR SHALL RELOCATE EXISTING SUPPLY AIR & RETURN AIR DUCTING AND REGISTERS AS REQUIRED TO ACCOMMODATE NEW WALLS AND LIGHTING LAYOUT. EXTEND AND OR MODIFY DUCTWORK AS REQUIRED. COORDINATE WITH GENERAL CONTRACTOR/OWNER REPRESENTATIVE IN FIELD.

SUBMITTALS:

1. CONTRACTOR TO ALLOW 10 WORKING DAYS FOR SUBMITTAL TURNAROUND.
2. CONTRACTOR TO PROVIDE SUBMITTALS FOR ALL EQUIPMENT AND MATERIALS IN A SINGLE PACKAGE. PIECEMEAL SUBMITTALS WILL BE RETURNED WITH A NOTE TO REVISE AND RESUBMIT.
3. SUBMITTALS WILL BE CHECKED FOR COMPLIANCE WITH CAPACITY REQUIREMENTS AND ELECTRICAL REQUIREMENTS. CONTRACTOR TO VERIFY THAT WEIGHTS, DIMENSIONS, AND DUCT CONNECTIONS ON SUBMITTED EQUIPMENT IS CONSISTENT WITH SCHEDULED EQUIPMENT PRIOR TO SUBMITTAL. CHANGES IN SCOPE BROUGHT ABOUT BY SUBMITTED EQUIPMENT THAT DOES NOT COMPLY WITH THE WEIGHTS, DIMENSIONS, OR CONNECTION LOCATIONS ON SCHEDULED EQUIPMENT SHALL BE THE SOLE RESPONSIBILITY OF THE CONTRACTOR.

SITE CONDITIONS

SITE CONDITIONS:
CITY: MIDVALE, UTAH
ELEVATION: 4,383'
OUTDOOR CONDITIONS:
WINTER: HTG: 3° F
SUMMER: CLG: 98° F
INDOOR CONDITIONS
WINTER: HTG: 75° F
SUMMER: CLG: 72° F

IF TEMPERATURES SHOWN DO NOT MATCH CONDITIONS DESIRED FOR THIS PROJECT CONTACT THE ENGINEER OF RECORD.

DESIGN CONTACTS

MECHANICAL ENGINEER:	MARK MAKIN
MECHANICAL PROJECT MANAGER:	CHRIS FALSLEV
MECHANICAL DESIGNER:	TRE PRESSON

LMnt ARCHITECTURE

Architecture
Landscape Architecture
Land Planning
Interior Design
Construction Management
LEED Consulting

9672 South 700 East Suite 203
Sandy Utah 84070
ph. 801.987.3911
www.lmntarch.com

TRIUMPH DESIGN BUILD

SEAL:

REGISTERED PROFESSIONAL ENGINEER
MARK MAKIN
8/17/20
STATE OF UTAH

project:
GoEngineer T.I.
739 E Fort Union Blvd
Midvale, UT 84047

project no: 20021

date: 2020.07.06

revisions:

Permit Set

sheet:
MECHANICAL NOTES AND LEGENDS

M0.1

SHEET SIZE: 24" x 36"

ROYAL ENGINEERING

ELECTRICAL
1837 S. EAST BAY BLVD.
PHONE: 801.375.2228

MECHANICAL
PROVO, UTAH 84606
FAX: 801.375.2676

SHEET NOTES:

1. SEE SHEET M1.2 FOR NEW DUCT PLAN. RE–USE EXISTING DUCTING WHERE POSSIBLE.
2. EXISTING SPIRAL DUCTING TO REMAIN AND BE REUSED.

MECHANICAL KEYED NOTES:

1. EXISTING ROOFTOP EXHAUST EQUIPMENT TO BE REMOVED FROM OFF OF SITE. SEAL ALL PENETRATIONS WEATHER TIGHT. COORDINATE WITH OWNER'S REPRESENTATIVE.
2. EXISTING RTU TO BE REMOVED FROM OFF OF SITE. SEE SHEET M1.2 FOR REPLACEMENT UNIT. COORDINATE WITH OWNER'S REPRESENTATIVE.
3. EXISTING RTU TO REMAIN AND BE REUSED. PROTECT FROM DAMAGE AND REPAIR AS REQUIRED. COORDINATE ALL REPAIRS WITH OWNER'S REPRESENTATIVE.
4. EXISTING SUPPLY AND RETURN DIFFUSERS TO BE REMOVED, PROTECTED FROM DAMAGE, AND CLEANED TO LIKE NEW CONDITION FOR RE–USE (WHERE POSSIBLE).
5. EXISTING LOCATION OF T–STATS. T–STATS TO BE REMOVED AND REPLACED. SEE M1.2 FOR NEW LOCATIONS.
6. EXISTING ROUND SPIRAL DUCT TO REMAIN AND BE PROTECTED DURING CONSTRUCTION.
7. ALL DUCT AND GRILLES TO BE REMOVED AND DISPOSED OF OFF SITE.

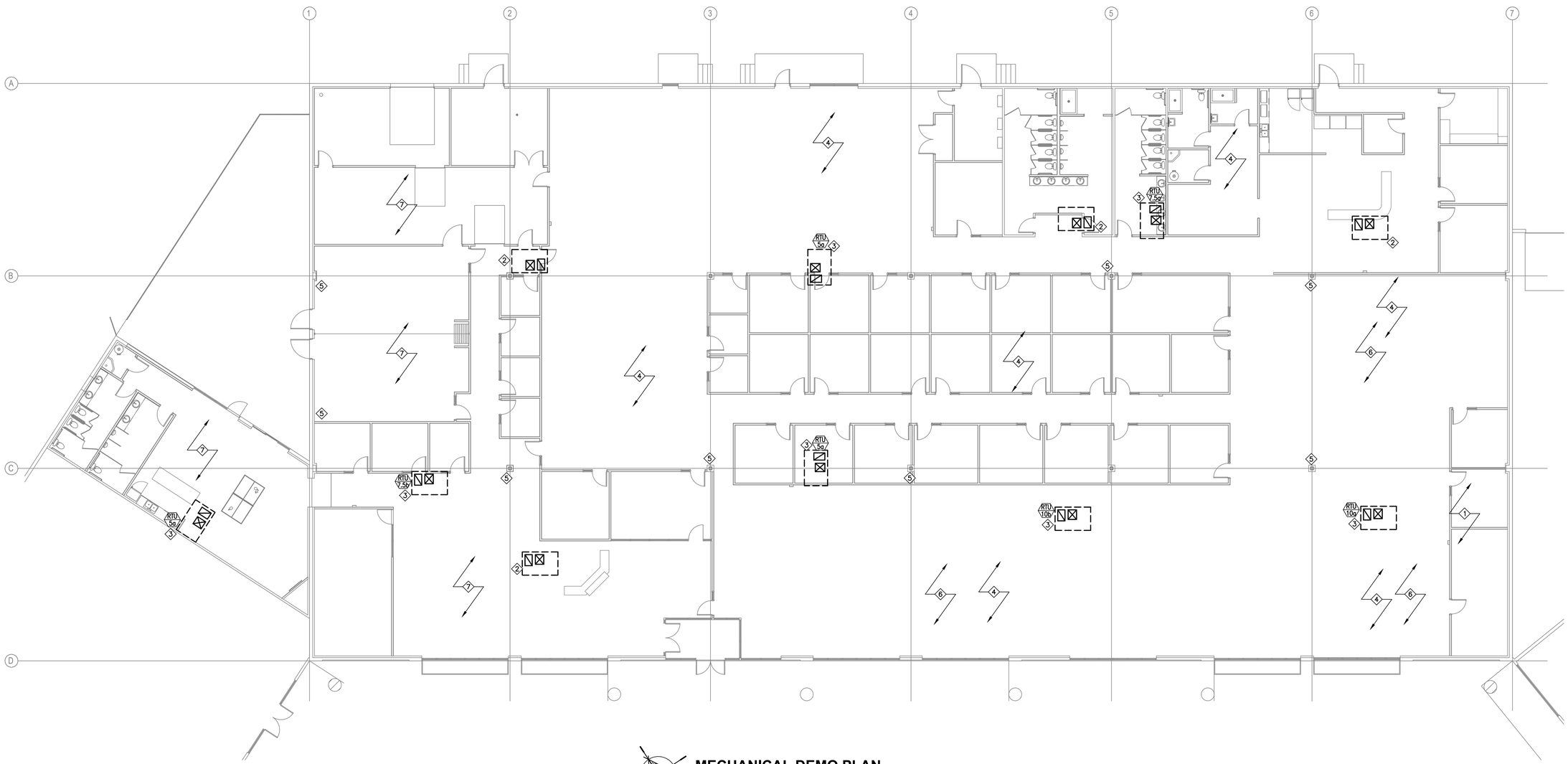

MECHANICAL DEMO PLAN
SCALE: 3/32" = 1'–0"

LMnt ARCHITECTURE

Architecture
Landscape Architecture
Land Planning
Interior Design
Construction Management
LEED Consulting

9672 South 700 East Suite 203
Sandy Utah 84070
ph. 801.987.3911
www.lmntarch.com

TRIUMPH DESIGN BUILD

SEAL:

LICENSED PROFESSIONAL ENGINEER
MARK MAKIN
8/17/20
STATE OF UTAH

project:
GoEngineer T.I.
739 E Fort Union Blvd
Midvale, UT 84047

project no: 20021

date: 2020.07.06

revisions:

Permit Set

sheet:
MECHANICAL DEMO PLAN

M1.1

SHEET SIZE: 24" x 36"

ROYAL ENGINEERING

ELECTRICAL
1837 S. EAST BAY BLVD.
PHONE: 801.375.2228

MECHANICAL
PROVO, UTAH 84606
FAX: 801.375.2676

MECHANICAL KEYED NOTES:

1. FIELD VERIFY 7-DAY PROGRAMMABLE THERMOSTAT LOCATION WITH OWNERS REPRESENTATIVE. INSTALL THERMOSTAT AT 48" A.F.F.. PROVIDE AND INSTALL HEAVY DUTY LOCKABLE COVER.
2. PROVIDE AND INSTALL 6"ø EXHAUST DUCT TO OWNER REPRESENTATIVE APPROVED EXHAUST VENT TERMINATION. VERIFY LOCATION IN FIELD. ACTUAL DUCT SIZE DETERMINED BY EXHAUST FAN OUTLET.
3. PROVIDE AND INSTALL 8"ø EXHAUST DUCT TO OWNER REPRESENTATIVE APPROVED EXHAUST VENT TERMINATION. VERIFY LOCATION IN FIELD. ACTUAL DUCT SIZE DETERMINED BY EXHAUST FAN OUTLET.
4. PROVIDE AND INSTALL 10"ø EXHAUST DUCT TO OWNER REPRESENTATIVE APPROVED EXHAUST VENT TERMINATION. VERIFY LOCATION IN FIELD. ACTUAL DUCT SIZE DETERMINED BY EXHAUST FAN OUTLET.
5. PROPOSED LOCATION OF HIGH-LOW TRANSFER GRILLE(S) FOR NOTED CFM. COORDINATE FINAL LOCATION WITH STRUCTURE.

MECHANICAL KEYED NOTES:

6. SUGGESTED ELECTRIC HEATER LOCATION IN CEILING STRUCTURE. INSTALL PER MANUFACTURES RECOMMENDATIONS. COORDINATE LOCATION AND MOUNTING WITH STRUCTURE AND OWNER REPRESENTATIVE.
7. ANTICIPATED LOCATION OF HORIZONTAL FAN COIL LOCATED IN DROPPED CEILING SPACE WITH UNIT ACCESS PANEL PER CURRENT CODE REQUIREMENTS. PROVIDE AND INSTALL CONDENSATE PIPING TO PLUMBING CONTRACTOR INSTALLED WALL BOX.
8. ALL EXHAUST AIR DUCTING SHALL TERMINATE WITH A BACKDRAFT DAMPER AND MANUFACTURER/OWNERS REPRESENTATIVE RECOMMENDED TERMINATION GRILLE AT A MINIMUM OF 3 FEET FROM OPERABLE BUILDING OPENINGS AND 10' FROM MECHANICAL FRESH AIR INTAKES (IMC SECTION 501.3.1 #3).
9. PROVIDE AND INSTALL RETURN AIR GRILLE CAPABLE OF CFM NOTED WITH AN NC OF NO GREATER THAN 25. PROVIDE AND INSTALL FILTER SECTION AFTER OUTSIDE AIR INTAKE IN DUCTING. (RTUs IN CURB ASSEMBLY).
10. MAKE DUCT TRANSITION AS REQUIRED FOR CONNECTION TO AIR HANDLER.

MECHANICAL KEYED NOTES:

11. ANTICIPATED ROUTING OF PVC EXHAUST AND COMBUSTION PIPING PER MANUFACTURERS RECOMMENDATIONS (BY PLUMBING CONTRACTOR) SHOWN FOR REFERENCE. COORDINATE TERMINATION WITH PLUMBING CONTRACTOR TO MAINTAIN ALL REQUIRED CLEARANCES.
12. SUGGESTED LOCATION OF OUTSIDE AIR DUCTING AND INTAKE WITH APPROVED GRILLE. COORDINATE FINAL LOCATION GRILLE/INTAKE WITH OWNER REPRESENTATIVE. COORDINATE COLOR WITH OWNER REPRESENTATIVE. SEE MECHANICAL DETAILS, NOTES AND OUTSIDE AIR SCHEDULE.
13. PROVIDE AND INSTALL RETURN AIR FILTER BOX CAPABLE OF CFM NOTED WITH AN NC OF NO GREATER THAN 25. PROVIDE AND INSTALL FILTER SECTION AFTER OUTSIDE AIR INTAKE IN DUCTING.

SHEET NOTES:

1. ALL SPIRAL DUCTING DEMOLISHED FROM CEILING SHALL BE PROTECTED IN LIKE NEW CONDITION AND REUSED WHERE POSSIBLE.

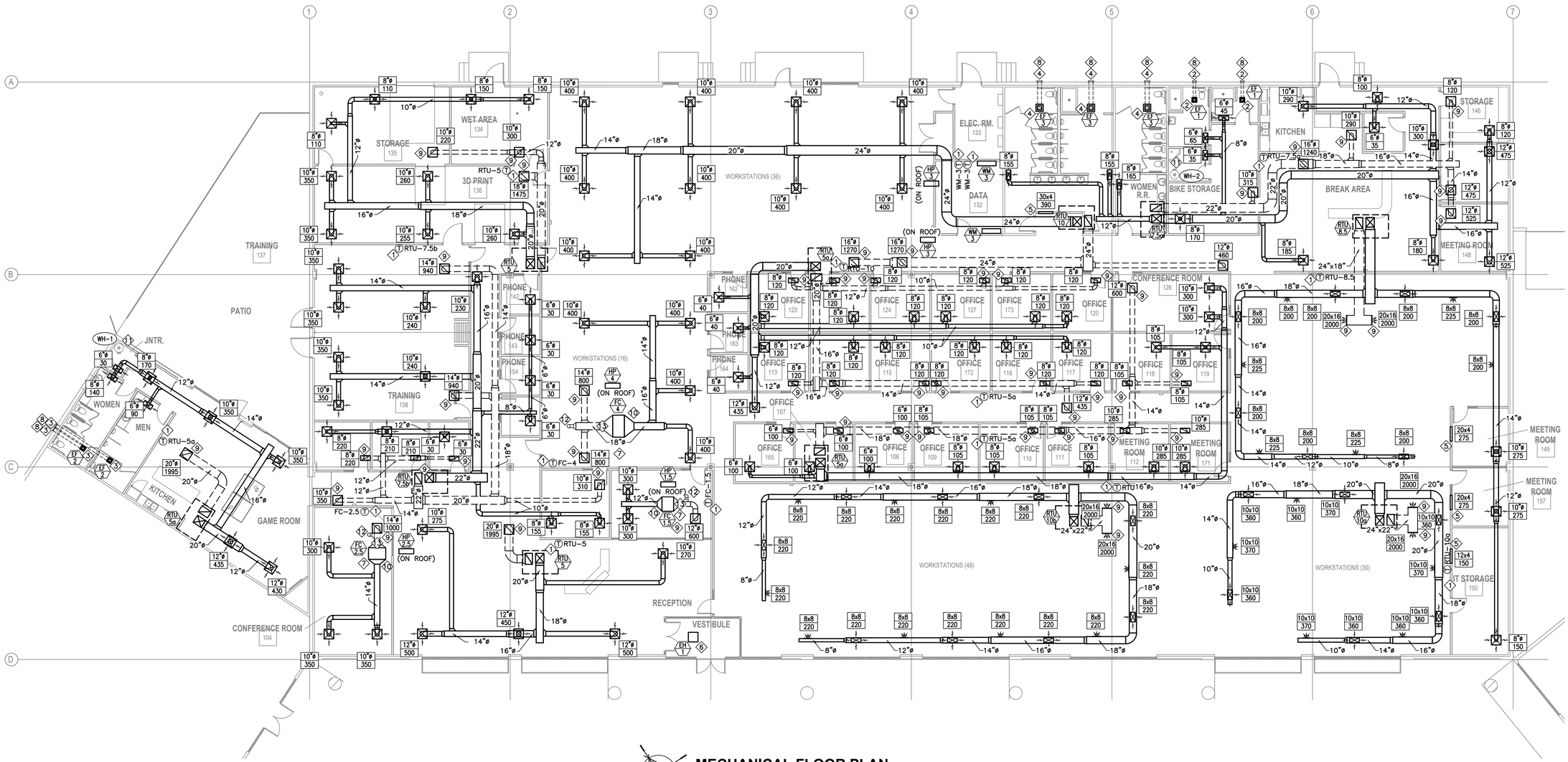

MECHANICAL FLOOR PLAN

SCALE: 3/32" = 1'-0"

LMnt ARCHITECTURE

Architecture
Landscape Architecture
Land Planning
Interior Design
Construction Management
LEED Consulting

9672 South 700 East Suite 203
Sandy Utah 84070
ph. 801.987.3911
www.lmntarch.com

TRIUMPH DESIGN BUILD

SEAL:

LICENSED PROFESSIONAL ENGINEER MARC MAKIN 8/17/20 STATE OF UTAH

project: GoEngineer T.I.
739 E Fort Union Blvd
Midvale, UT 84047

project no: 20021

date: 2020.07.06

revisions:

Permit Set

sheet: MECHANICAL FLOOR PLAN

M1.2

SHEET SIZE: 24" x 36"

ROYAL ENGINEERING

ELECTRICAL
1837 S. EAST BAY BLVD.
PHONE: 801.375.2228

MECHANICAL
PROVO, UTAH 84606
FAX: 801.375.2676

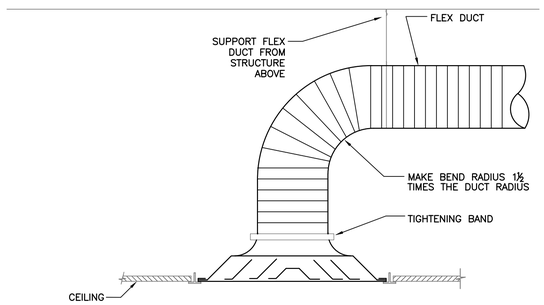

DIFFUSER CONNECTION DETAIL

SCALE: NONE

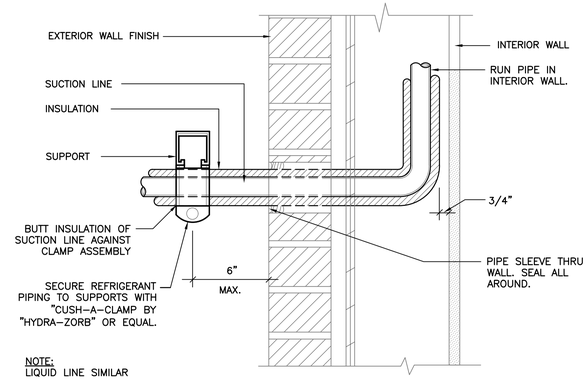

TYPICAL REFRIGERANT PIPE SUPPORT AT WALL

SCALE: NONE

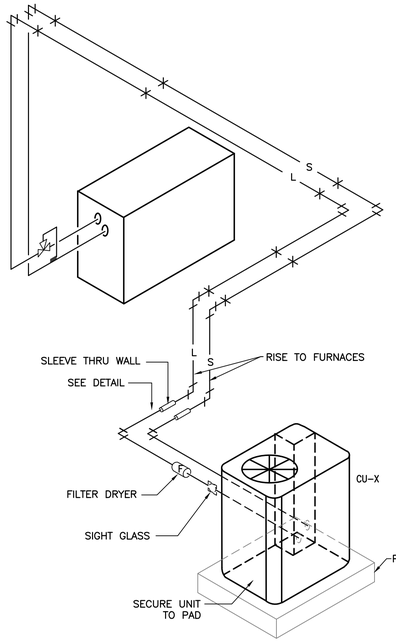

TYPICAL REFRIGERANT SCHEMATIC (CU ON ROOF)

SCALE: NONE

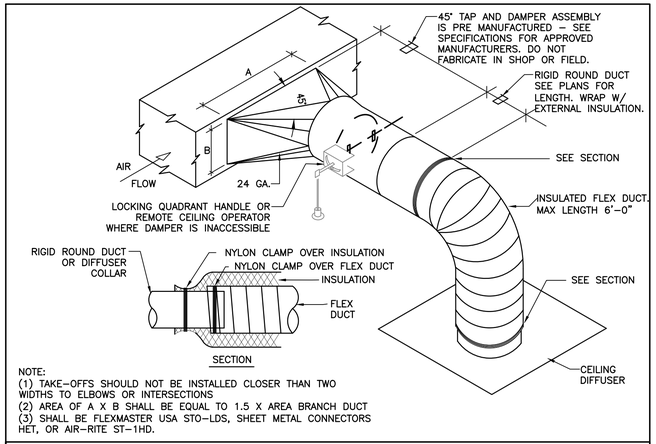

NOTE:
(1) TAKE-OFFS SHOULD NOT BE INSTALLED CLOSER THAN TWO WIDTHS TO ELBOWS OR INTERSECTIONS
(2) AREA OF A X B SHALL BE EQUAL TO 1.5 X AREA BRANCH DUCT
(3) SHALL BE FLEXMASTER USA STO-LDS, SHEET METAL CONNECTORS HET, OR AIR-RITE ST-1HD.

INSULATED ROUND TAKE-OFF

SCALE: NONE

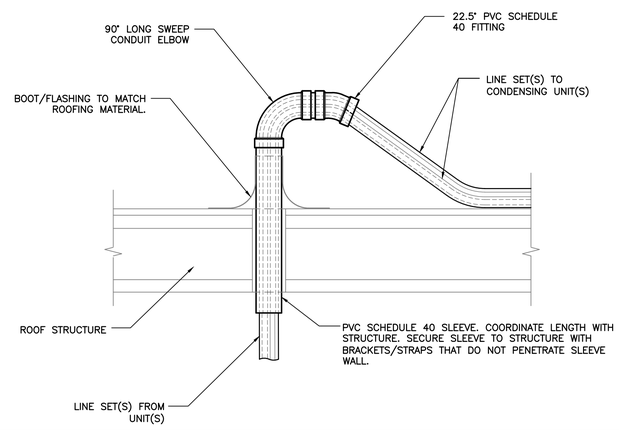

TYPICAL LINE SET GOOSE NECK ROOF DETAIL

SCALE: NONE

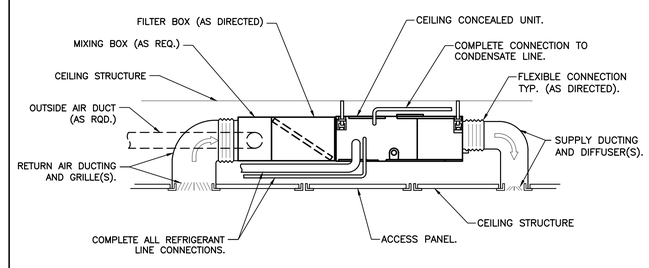

NOTES:
1. INSTALL UNIT USING AND FOLLOWING MANUFACTURERS INSTALLATION INSTRUCTIONS. (MOUNTING, FASTENERS, SUPPORTS ETC,).
2. COMPLETE CONNECTION OF ALL CONDENSATE, LINE SETS, DUCTING, ETC..
3. PROVIDE AND INSTALL FILTER BOX/SECTION AND OUTSIDE AIR MIXING BOX AS REQUIRED AND/OR AS DIRECTED ON PLANS OR IN SCHEDULES.
4. COORDINATE SIZE AND LOCATIONS OF ACCESS PANELS WITH CEILING TYPE AND OWNER REPRESENTATIVE.

TYPICAL CONCEALED AIR HANDLER INSTALLATION DETAIL

SCALE: NONE

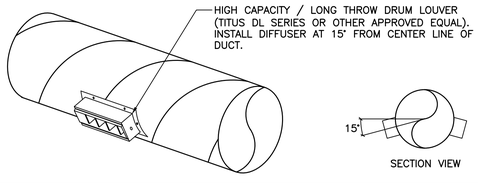

DRUM LOUVER MOUNTING DETAIL

SCALE: NONE

NOTE:
ALL EXHAUST DUCT PENETRATIONS OF THERMAL ENVELOPE SHALL HAVE A BACK DRAFT DAMPER AT THE DUCT PENETRATION.

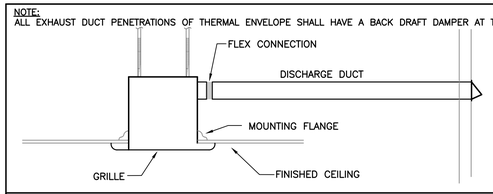

TYPICAL CEILING MOUNTED EXHAUST FAN

SCALE: NONE

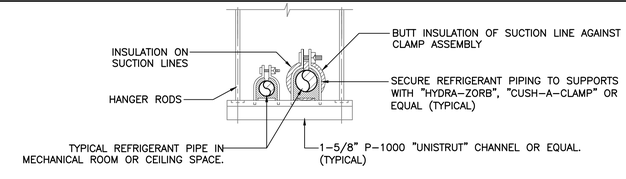

SUSPENDED REFRIGERANT PIPE SUPPORT DETAIL

SCALE: NONE

LMnt ARCHITECTURE

Architecture
Landscape Architecture
Land Planning
Interior Design
Construction Management
LEED Consulting

9672 South 700 East Suite 203
Sandy Utah 84070
ph. 801.987.3911
www.lmntarch.com

TRIUMPH DESIGN BUILD

SEAL:

REGISTERED PROFESSIONAL ENGINEER MARC MAKIN 8/17/20 STATE OF UTAH

project: GoEngineer T.I.
739 E Fort Union Blvd
Midvale, UT 84047

project no: 20021

date: 2020.07.06

revisions:

Permit Set

sheet:

MECHANICAL DETAILS

M5.1

SHEET SIZE: 24" x 36"

ROYAL ENGINEERING

ELECTRICAL
1837 S. EAST BAY BLVD.
PHONE: 801.375.2228

MECHANICAL
PROVO, UTAH 84606
FAX: 801.375.2676

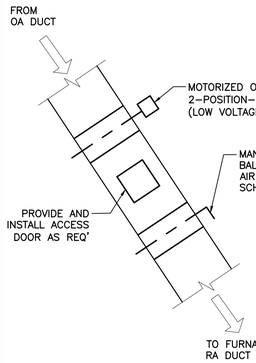

CONTROL SEQUENCES

1. FURNACE SUPPLY AIR FAN SHALL RUN CONTINUOUSLY IN OCCUPIED MODE.
2. MOTORIZED OUTSIDE AIR DAMPER SHALL OPEN DURING OCCUPIED MODE AND SHALL REMAIN CLOSED DURING UNOCCUPIED MODE.
3. DURING A CALL FOR HEAT, IN BOTH OCCUPIED AND UNOCCUPIED MODES, THE FURNACE HEATING SYSTEM SHALL CYCLE ON AND OPERATE UNTIL THE PROGRAMMED SET–POINT IS REACHED.
4. DURING A CALL FOR COOLING, IN BOTH OCCUPIED AND UNOCCUPIED MODES, THE FURNACE AND CONDENSING UNITS SHALL CYCLE ON IN COOLING MODE AND OPERATE UNTIL THE PROGRAMMED SET–POINT IS REACHED.
5. UNLESS OTHERWISE SPECIFIED, EACH HVAC SYSTEM SHALL BE CONTROLLED BY A 7–DAY PROGRAMMABLE THERMOSTAT THAT HAS AUTOMATIC CHANGE OVER BETWEEN HEATING AND COOLING. THERMOSTAT SHALL HAVE OCCUPIED AND UNOCCUPIED MODES. THERMOSTAT SHALL MEET CURRENT REQUIREMENTS OF THE INTERNATIONAL ENERGY CONSERVATION CODE.
6. MECHANICAL CONTRACTOR SHALL PROVIDE AND INSTALL ALL LOW VOLTAGE WIRING, LOW VOLTAGE MOTORIZED ACTUATORS FOR DAMPER CONTROL, AND ANY OTHER NEEDED COMPONENTS FOR A FULLY OPERATIONAL SYSTEM.
7. THERMOSTAT DESIGN STANDARD SHALL BE VENSTAR T4900.

TYPICAL OUTSIDE AIR DUCT DETAIL (COMMERCIAL)

SCALE: NONE

MINIMUM HANGER SIZE FOR ROUND DUCT

DIAMETER	MAXIMUM SPACING	WIRE DIA.	ROD	STRAP
10" DN	12'	ONE 12 Ga.	1/4"	1"x22 Ga.
11–18"	12'	TWO 12 Ga. OR ONE 8 Ga.	1/4"	1"x20 Ga.
19–24'	12'	TWO 10 Ga.	1/4"	1"x20 Ga.
25–36"	12'	TWO 8 Ga.	3/8"	1"x20 Ga.
37–50"	12'	N/A	TWO 3/8"	TWO 1"x20 Ga.
51"–60"	12'	N/A	TWO 3/8"	TWO 1"x18 Ga.
61"–84"	12'	N/A	TWO 3/8"	TWO 1"x16 Ga.

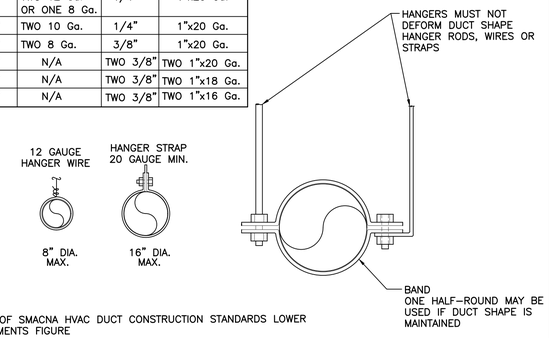

REFERENCE:
LATEST EDITION OF SMACNA HVAC DUCT CONSTRUCTION STANDARDS LOWER HANGER ATTACHMENTS FIGURE

ROUND DUCT HANGER DETAIL

SCALE: NONE

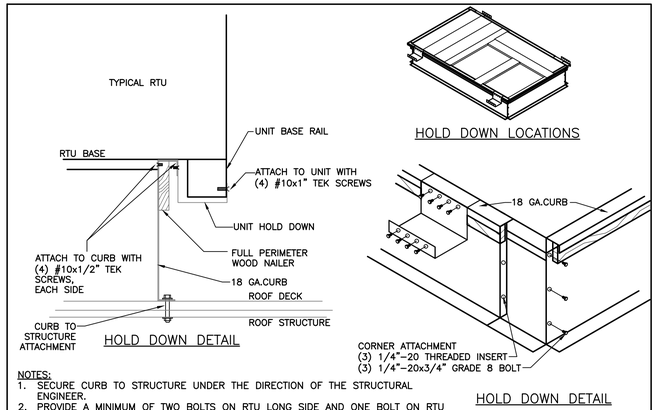

NOTES:
1. SECURE CURB TO STRUCTURE UNDER THE DIRECTION OF THE STRUCTURAL ENGINEER.
2. PROVIDE A MINIMUM OF TWO BOLTS ON RTU LONG SIDE AND ONE BOLT ON RTU SHORT SIDE (1/2"ø A307).

DESIGN STANDARD IS PROVENT RTU HOLD DOWN

TYPICAL ROOF CURB DETAIL

SCALE: NONE

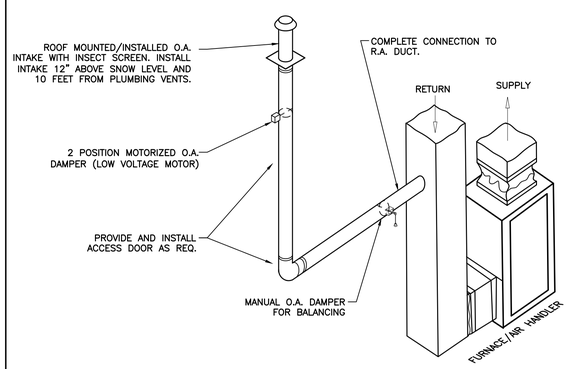

NOTE:
SEE OUTSIDE AIR CONTROL SEQUENCES DETAIL FOR INFORMATION RELATING TO DESIRED CONTROLS.

TYPICAL ROOF MOUNTED O.A. INTAKE

SCALE: NONE

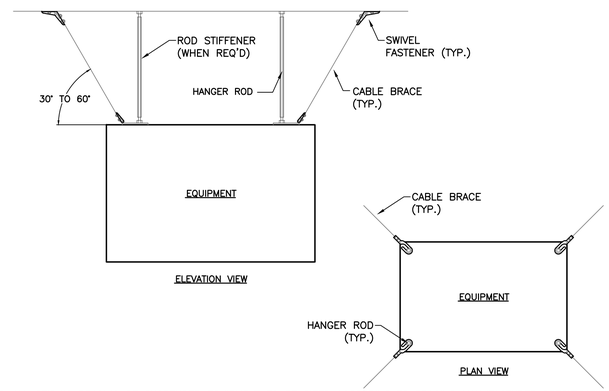

NOTE: ALL SEISMIC BRACING OF SUSPENDED EQUIPMENT TO BE SIZED ACCORDING TO BRACING MANUFACTURER SPECIFICATIONS AND TO BE IN ACCORDANCE WITH ASCE 7–16 REQUIREMENTS.

SUSPENDED EQUIPMENT SEISMIC BRACING DETAIL

SCALE: NONE

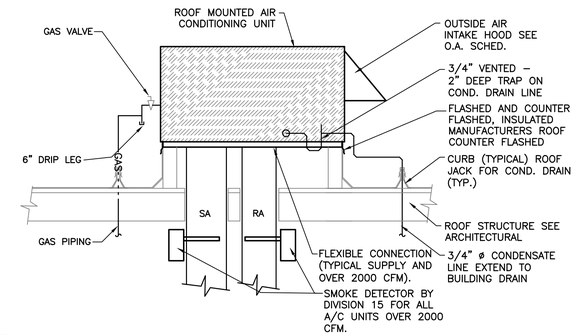

NOTES:
1. PROVIDE AND INSTALL NEUTRALIZING DEVICE WHERE CONDENSATE WILL CAUSE DAMAGE TO THE DRAINAGE PIPING SHALL BE PER 2018 IPC SECTION 803.
2. USE A 18 GAUGE ROOF CURB. THE ROOF CURB WILL HAVE TO BE SECURELY FASTENED TO THE RTU AND THE ROOF STRUCTURE (NOT THE ROOF DECKING). SEE TYPICAL ROOF CURB DETAIL.

TYPICAL RTU INSTALLATION DETAIL

SCALE: NONE

DIMENSION OF LONGEST SIDE, INCHES	SHEET METAL GAGE (ALL FOUR SIDES)	TRANSVERSE REINFORCING (1)					
		MINIMUM REINFORCING ANGLE SIZE AND MAXIMUM LONGITUDINAL SPACING BETWEEN TRANSVERSE JOINTS &/OR INTERMEDIATE REINFORCING	AT JOINTS				
			MIN. H. IN.	PLAIN S SLIP (DRIVE SLIP)	HEMMED S SLIP	ALTER'NT BAR SLIP (H)	REINFORCED BAR SLIP (H)
				RECOMMENDED GAUGE	RECOMMENDED GAUGE	RECOMMENDED GAUGE	RECOMMENDED GAUGE
UP THRU 12	26	NONE REQUIRED	1	26	26	24	24
13 – 18	24	NONE REQUIRED	1	24	24	24	24
19 – 30	24	1"X1"X1/8" @ 60 IN	1	24	24	24	24
31 – 36	22	1"X1"X1/8" @ 60 IN	1	–	–	22	22

(1) TRANSVERSE REINFORCING SIZE IS DETERMINED BY DIMENSION OF SIDE TO WHICH ANGLE IS APPLIED.

(2) LONGITUDINAL JOINTS TO BE PITTSBURG OR SNAP LOCK TYPE.

(3) ALL DUCTING TO BE CONSTRUCTED TO SMACNA INSTALLATION STANDARDS AND SPECIFICATIONS.

DUCT CONSTRUCTION DETAIL

SCALE: NONE

NOTE:
ALL TRANSVERSE AND LONGITUDINAL EDGES OF LINER TO BE COATED WITH ADHESIVE.

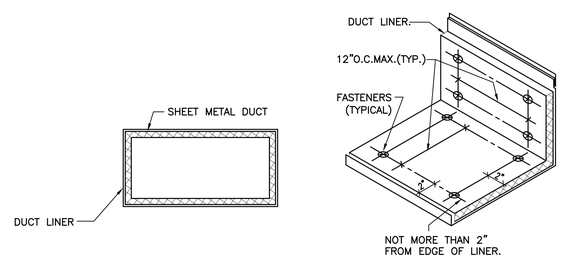

MINIMUM DUCT INSULATION R–VALUES FOR UNCONDITIONED SPACES PER 2018 IECC C403.11.1
SUPPLY = R6
RETURN = R6

MINIMUM DUCT INSULATION R–VALUES WHEN LOCATED OUTSIDE THE BUILDING PER 2018 IECC C403.11.1
SUPPLY = R8 (ZONE 1–4) R12 (ZONE 5–8)
RETURN = R8 (ZONE 1–4) R12 (ZONE 5–8)

NOTE:
THERMAL AND SOUND INSULATION AND COVERINGS, LININGS AND ADHESIVES (WHEN USED) INSTALLED IN CONCEALED AND EXPOSED SPACES SHALL MEET THE REQUIREMENTS OF ASTM E 84. FLAME SPREAD INDEX THAT IS NOT MORE THAN 25 AND A SMOKE–DEVELOPED INDEX OF NOT MORE THAN 50 WHEN TESTED IN ACCORDANCE WITH ASTM E 84.

DUCT LINER DETAIL

SCALE: NONE

NOTES:
1. RTU SUPPLY AIR FAN SHALL RUN CONTINUOUSLY IN OCCUPIED MODE.
2. MOTORIZED OUTSIDE AIR DAMPER SHALL OPEN DURING OCCUPIED MODE AND SHALL REMAIN CLOSED DURING UNOCCUPIED MODE.
3. DURING A CALL FOR HEAT, IN BOTH OCCUPIED AND UNOCCUPIED MODES, THE HEATING SYSTEM SHALL CYCLE ON AND OPERATE UNTIL THE PROGRAMMED SET–POINT IS REACHED.
4. DURING A CALL FOR COOLING, IN BOTH OCCUPIED AND UNOCCUPIED MODES, THE COOLING SYSTEM SHALL CYCLE ON IN COOLING MODE AND OPERATE UNTIL THE PROGRAMMED SET–POINT IS REACHED.
5. UNLESS OTHERWISE SPECIFIED, EACH HVAC SYSTEM SHALL BE CONTROLLED BY A 7–DAY PROGRAMMABLE THERMOSTAT THAT HAS AUTOMATIC CHANGE OVER BETWEEN HEATING AND COOLING. THERMOSTAT SHALL HAVE OCCUPIED AND UNOCCUPIED MODES. THERMOSTAT SHALL MEET CURRENT REQUIREMENTS OF THE INTERNATIONAL ENERGY CONSERVATION CODE.
6. MECHANICAL CONTRACTOR SHALL PROVIDE AND INSTALL ALL LOW VOLTAGE WIRING, LOW VOLTAGE MOTORIZED ACTUATORS FOR DAMPER CONTROL, AND ANY OTHER NEEDED COMPONENTS FOR A FULLY OPERATIONAL SYSTEM.
7. THERMOSTAT DESIGN STANDARD SHALL BE VENSTAR T4900.

RTU CONTROL SEQUENCE

SCALE: NONE

LMnt ARCHITECTURE
Architecture
Landscape Architecture
Land Planning
Interior Design
Construction Management
LEED Consulting

9672 South 700 East Suite 203
Sandy Utah 84070
ph. 801.987.3911
www.lmntarch.com

TRIUMPH DESIGN BUILD

SEAL:

project:
GoEngineer T.I.
739 E Fort Union Blvd
Midvale, UT 84047

project no: 20021

date: 2020.07.06

revisions:

Permit Set

sheet:
MECHANICAL DETAILS

M5.2

SHEET SIZE: 24" x 36"

ROYAL ENGINEERING
ELECTRICAL
1837 S. EAST BAY BLVD.
PHONE: 801.375.2228
MECHANICAL
PROVO, UTAH 84606
FAX: 801.375.2676

HEAT PUMP UNIT SCHEDULE - OUTDOOR UNIT

MARK	TONNAGE	RATED COOLING CAPACITY (BTU/H)	HEATING CAPACITY @ 47°F (BTU/H)	ELECTRICAL VOLTAGE	ELECTRICAL MCA	ELECTRICAL MOCP	NOTES
HP 1.5	1.5	16,000	18,000	208/230V 1-PHASE 60 Hz	13	20	DESIGN GUIDE: 150 LBS. CARRIER 38MAQB SERIES (18.5 SEER/9.6 HSPF) 1 3 2
HP 2.5	2.5	28,600	21,600	208/230V 1-PHASE 60 Hz	20	30	DESIGN GUIDE: 200 LBS. CARRIER 38MAQB SERIES (18.0 SEER/10.8 HSPF) 1 3 2
HP 3	3	36,000	36,000	208/230V 1-PHASE 60 Hz	30	50	DESIGN GUIDE: 175 LBS. CARRIER 38MAQB SERIES (16.5 SEER/11.5 HSPF) 1 3 2
HP 4	4	48,000	49,500	208/230V 1-PHASE 60 Hz	35	50	DESIGN GUIDE: 250 LBS. CARRIER 38MBRQ SERIES (17.4 SEER/10.3 HSPF) 1 3 2

1. APPROVED MANUFACTURERS:LG, CARRIER, YORK, FUJITISU, MIDEA, MITSUBISHI.(SUBJECT TO PROJECT DOCUMENT CONFORMANCE)
2. INSTALL PER MANUFACTURER RECOMMENDATIONS.
3. 15 SEER MINIMUM EFFICIENCY, PROVIDE SNOW STAND AND WIND BAFFLES, AND LOW AMBIENT KIT FOR OPERATION TO -4°F.

FAN COIL SCHEDULE - INDOOR UNIT

MARK	DESIGN GUIDE	NOMINAL COOLING SUPPLY CFM	ESP (IN)	DELIVERED MINIMUM COOLING AT SITE CONDITIONS (BTU/H)	DELIVERED MINIMUM HEATING AT SITE CONDITIONS (BTU/H)	ELECTRICAL VOLT/PH/HZ	ELECTRICAL UNIT MCA	ELECTRICAL UNIT MOCP	REMARKS
FC 1.5	CARRIER 40MBDQ SERIES	600	0.3	16,800	11,900	208/1/60	1.2	15	1 2 3 4 5 6 7
FC 2.5	CARRIER 40MBDQ SERIES	1,000	0.5	30,000	17,800	208/1/60	2.45	15	1 2 3 4 5 6 7
WM 3	CARRIER 40MAQB SERIES	870	0.3	36,000	36,000	208/1/60	0.4	15	1 2 3 4 5 6 7
FC 4	CARRIER 40MBDQ SERIES	1,230	0.6	42,000	20,500	208/1/60	3.65	15	1 2 3 4 5 6 7

1. SITE CONDITIONS ARE 98/62° DB/WB SUMMER, 3°F DB WINTER, AND AN ELEVATION OF 4,250 FEET ABOVE SEA LEVEL.
2. APPROVED MANUFACTURERS:MIDEA, MITSUBISHI, CARRIER, FUJITSU, FRIEDRICH, LENNOX, LG.(SUBJECT TO DOCUMENT CONFORMANCE)
3. MECHANICAL CONTRACTOR TO PROVIDE AND INSTALL SYSTEMS FOR COLD WEATHER HEATING PER MANUFACTURER RECOMMENDATIONS.
4. SEE HEAT PUMP UNIT SCHEDULE FOR OUTDOOR UNIT INFORMATION.
5. ELECTRICAL CONTRACTOR SHALL PROVIDE CONNECTION BETWEEN INDOOR AND OUTDOOR UNIT (INDOOR UNIT POWERED BY OUTDOOR UNIT).
6. MECHANICAL CONTRACTOR TO PROVIDE AND INSTALL ALL MANUFACTURER RECOMMENDED MOUNTING HARDWARE.
7. MECHANICAL CONTRACTOR TO PROVIDE AND INSTALL CONDENSATE PIPING TO PLUMBING CONTRACTOR PROVIDED WALL BOX.

OUTSIDE AIR BALANCING SCHEDULE

MARK	ZONE / AREA	BALANCE TO CFM	MINIMUM DUCT SIZE	REMARKS
RTU 5a	GAME ROOM AREA	300	INTEGRAL ECON.	ECONOMIZER WITH ALL CONTROLS
FC 2.5	CONFERENCE ROOM-104	155	8"ø OR 8"X6"	DEDICATED HARD DUCT W/ INLINE DUCT HEATER TO R.A., SEE O.A. DUCT DETAIL & SCHEDULES FOR ADD. INFO.
RTU 5	RECEPTION AREA	525	INTEGRAL ECON.	ECONOMIZER WITH ALL CONTROLS
FC 1.5	CONFERENCE ROOM	90	6"ø OR 6"X5"	DEDICATED HARD DUCT W/ INLINE DUCT HEATER TO R.A., SEE O.A. DUCT DETAIL & SCHEDULES FOR ADD. INFO.
RTU 7.5b	TRAINING ROOMS	400	INTEGRAL ECON.	ECONOMIZER WITH ALL CONTROLS
RTU 5	3D PRINT AREA	465	INTEGRAL ECON.	ECONOMIZER WITH ALL CONTROLS
RTU 10	WORKSTATIONS AND HALLWAY	410	INTEGRAL ECON.	ECONOMIZER WITH ALL CONTROLS
RTU 7.5a	BREAK AREA AND RESTROOMS	335	INTEGRAL ECON.	ECONOMIZER WITH ALL CONTROLS
RTU 8.5	WORKSTATIONS AND MEETING ROOMS	405	INTEGRAL ECON.	ECONOMIZER WITH ALL CONTROLS
RTU 10a	WORKSTATIONS	310	INTEGRAL ECON.	ECONOMIZER WITH ALL CONTROLS
RTU 10b	WORKSTATIONS	420	INTEGRAL ECON.	ECONOMIZER WITH ALL CONTROLS
RTU 5a	OFFICES	225	INTEGRAL ECON.	ECONOMIZER WITH ALL CONTROLS
RTU 5a	OFFICES AND MEETING ROOMS	285	INTEGRAL ECON.	ECONOMIZER WITH ALL CONTROLS
FC 4	WORKSTATIONS	150	8"ø OR 8"X6"	DEDICATED HARD DUCT W/ INLINE DUCT HEATER TO R.A., SEE O.A. DUCT DETAIL & SCHEDULES FOR ADD. INFO.

$$\left(V_{bz} = R_p P_z + R_a A_z\right)$$

INLINE ELECTRIC DUCT HEATER SCHEDULE

MARK	DESIGN GUIDE	NOMINAL BTUH	ELECTRICAL VOLTS/PH/HZ	ELECTRICAL NOMINAL LOAD WATTS	MOUNTING	REMARKS
DH 1	INDEECO QUA SERIES	4,968	208/3/60	1,500	INLINE	1 2 3 4 5

1. APPROVED MANUFACTURERS: BROAN, BERKO, QMARK, MARKEL, RAYWALL, REZNOR, REDD. (SUBJECT TO PROJECT DOCUMENT CONFORMANCE)
2. CONTRACTOR SHALL INSTALL EQUIPMENT AS PER MANUFACTURER'S SPECIFICATIONS.
3. HEATER SHALL BE PROVIDED WITH INTEGRAL THERMOSTAT AND A PERMANENTLY LUBRICATED MOTOR.
4. UNIT SHALL HAVE ZERO CLEARANCE INSTALLATION AND A MANUAL DUCT BALANCE DAMPER FOR OUTSIDE AIR BALANCING.
5. CONTRACTOR SHALL PROVIDE ALL MOUNTING HARDWARE AND ACCESS DOORS AS REQUIRED.

PACKAGED ROOFTOP UNIT

MARK	DESIGN GUIDE	SUPPLY CFM	ESP (IN)	NOMINAL COOLING CAPACITY (TONS)	HEATING CAPACITY (1000*BTU/hr) IN/OUT	COOLING EAT DB/WB	COOLING LAT DB/WB	HEATING EAT DB	HEATING LAT DB	ELECTRICAL VOLT/PH/HZ	ELECTRICAL BLOWER MOTOR BHP	ELECTRICAL UNIT MCA	ELECTRICAL UNIT MOCP	ARI EFFICIENCY SEER	ARI EFFICIENCY EER	ARI EFFICIENCY IEER	MAX OPERATING WEIGHT (LBS)	REMARKS
RTU 5	Carrier-48FCEA06	1,995	1.0	5	MEDIUM 110/88	80/62	52/52	55	94	208/3/60	1.21	28	40	14	11	--	950	1 2 3 4 6 7 8 10 11
RTU 8.5	Carrier-48TCED09	3,400	1.0	8.5	MEDIUM 180/148	80/62	51/51	53	90	208/3/60	1.77	46	60	-	11	12.8	1,450	1 2 3 5 6 7 8 9 10 12
RTU 10	Carrier-48TCED12	4,000	1.0	10	MEDIUM 224/184	80/62	51/51	53	93	208/3/60	2.69	53	60	-	11.1	12.8	1,500	1 2 3 5 6 7 8 9 10 12

1. SITE CONDITIONS ARE 98/60° DB/WB SUMMER, 3°F DB WINTER, AND AN ELEVATION OF 4,383 FEET ABOVE SEA LEVEL.
2. APPROVED MANUFACTURERS: YORK, TRANE, LENNOX, AAON, AND DAIKIN. (SUBJECT TO PROJECT DOCUMENT CONFORMANCE)
3. BELT DRIVEN UNIT.
4. 1-STAGE HEATING AND COOLING.
5. 2-STAGE HEATING AND COOLING.
6. WITH R410a REFRIGERANT.
7. FACTORY INSTALLED ELECTRICAL DISCONNECT FOR ROOFTOP UNIT.
8. FACTORY INSTALLED GFCI CONVENIENCE OUTLET (NON POWERED) TO BE WIRED TO SEPARATE CIRCUIT PROVIDED BY ELECTRICAL CONTRACTOR.
9. FACTORY INSTALLED DUCT SMOKE DETECTOR SHALL BE INSTALLED IN THE SUPPLY AND RETURN AIR SIDE OF UNIT. UNIT SHALL BE WIRED FOR FAN SHUT DOWN.
10. UNIT WITH ROOF CURB THAT CAN SUPPORT NEXT LARGEST UNIT, IF APPLICABLE, CURB SHALL BE INSTALLED BY MECHANICAL CONTRACTOR.
11. FIELD INSTALLED ECONOMIZER CAPABLE OF 100% OUTSIDE AIR WITH DRY BULB TEMPERATURE SENSOR CONTROLS AND POWER EXHAUST.
12. FIELD INSTALLED ECONOMIZER CAPABLE OF 100% OUTSIDE AIR WITH DRY BULB TEMPERATURE SENSOR CONTROLS AND 100% POWER EXHAUST WITH MODULATING CONTROL.

EXISTING PACKAGED ROOFTOP UNIT

MARK	DESIGN GUIDE	SUPPLY CFM	ESP (IN)	NOMINAL COOLING CAPACITY (TONS)	HEATING CAPACITY (1000*BTU/hr) IN/OUT	COOLING EAT DB/WB	COOLING LAT DB/WB	HEATING EAT DB	HEATING LAT DB	ELECTRICAL VOLT/PH/HZ	ELECTRICAL BLOWER MOTOR BHP	ELECTRICAL UNIT MCA	ELECTRICAL UNIT MOCP	ARI EFFICIENCY SEER	ARI EFFICIENCY EER	ARI EFFICIENCY IEER	MAX OPERATING WEIGHT (LBS)	REMARKS
RTU 5a	Carrier-48TCEA06	1,995	1.0	5	115/93	--	--	--	--	208/3/60	--	29	40	13	--	-	950	1 2 3 4 5 6 7 8
RTU 7.5a	Carrier-48TMED008	3,000	1.0	7.5	180/144	--	--	--	--	208/3/60	--	40	45	-	10.1	-	1,450	1 2 3 4 5 6 7 8
RTU 7.5b	Carrier-48TCED08	3,000	1.0	7.5	180/148	--	--	--	--	208/3/60	--	43	50	-	11	-	1,450	1 2 3 4 5 6 7 8
RTU 10a	Carrier-48TCED12	4,000	1.0	10	224/184	--	--	--	--	208/3/60	--	53	60	-	11.1	-	1,500	1 2 3 4 5 6 7 8
RTU 10b	Lennox-GCS16	4,000	1.0	10	270/216	--	--	--	--	208/3/60	3	58	70	-	-	-	1,500	1 2 3 4 5 6 7 8

1. SITE CONDITIONS ARE 98/60° DB/WB SUMMER, 3°F DB WINTER, AND AN ELEVATION OF 4,383 FEET ABOVE SEA LEVEL.
2. APPROVED MANUFACTURERS: YORK, TRANE, LENNOX, AAON, AND DAIKIN. (SUBJECT TO PROJECT DOCUMENT CONFORMANCE)
3. BELT DRIVEN UNIT.
4. FACTORY INSTALLED ELECTRICAL DISCONNECT FOR ROOFTOP UNIT.
5. FACTORY INSTALLED GFCI CONVENIENCE OUTLET (NON POWERED) TO BE WIRED TO SEPARATE CIRCUIT PROVIDED BY ELECTRICAL CONTRACTOR.
6. FACTORY INSTALLED DUCT SMOKE DETECTOR SHALL BE INSTALLED IN THE SUPPLY AND RETURN AIR SIDE OF UNIT. UNIT SHALL BE WIRED FOR FAN SHUT DOWN.
7. UNIT WITH ROOF CURB THAT CAN SUPPORT NEXT LARGEST UNIT, IF APPLICABLE, CURB SHALL BE INSTALLED BY MECHANICAL CONTRACTOR.
8. FULL SERVICE AND A COMPONENT CHECK SHALL BE PERFORMED FOR EACH EXISTING AIR HANDLER/OUTDOOR UNIT. IT SHALL BE PERFORMED FOR A MINIMUM OF TWO HOURS (ON SITE) PER UNIT. THIS SHALL INCLUDE BUT IS NOT LIMITED TO:
   - -A REFRIGERANT LEAK TEST
   - -VERIFICATION OF REFRIGERANT CHARGE
   - -A VISUAL INSPECTION OF COILS
   - -REPLACEMENT OF ALL BELTS (LEAVE ONE SPARE OF EACH SIZE IF APPLICABLE)
   - -REPLACEMENT OF FILTERS
   - -CHECKING ALL MOTORS AND FANS (INCLUDING THE CONDENSER FAN MOTOR)
   - -CHECKING ALL CAPACITORS AND CONTACTORS
   - -CHECKING THERMOSTAT OPERATION AND CONTROL
   - -VERIFICATION THAT ENTERING AND LEAVING AIR TEMPERATURE OF ALL STAGES OF COOLING AND HEATING ARE WITHIN SPECIFICATIONS
   - -CLEANING OF EVAPORATOR COILS BY MANUFACTURER RECOMMENDED PROCEDURE
   - -CHECKING THE CONTROLS
   - -CLEANING THE CONDENSATE PANS/DRAINS
   - -CHECKING ACCESS AND MAINTENANCE DOOR HINGES AND LATCHES
   - -VERIFY THAT UNIT IS CAPABLE OF BRINGING IN RESPECTIVE OUTSIDE AIR AMOUNTS INDICATED IN OUTSIDE AIR BALANCING SCHEDULE.

   TESTS SHOULD ONLY BE PERFORMED WHEN OUTSIDE AIR TEMPERATURE IS WITHIN RECOMMENDED RANGE. IT MAY BE NECESSARY TO PERFORM HEATING AND/OR COOLING TESTS ON A DIFFERENT DAY WHEN THE TEMPERATURE IS WITHIN THE ACCEPTABLE RANGE.

CEILING EXHAUST FAN SCHEDULE

MARK	NOMINAL CFM	TOTAL STATIC PRESSURE IN. W.C.	ELECTRICAL RATED LOAD WATTS	ELECTRICAL VOLTS	ELECTRICAL HERTZ	ELECTRICAL PHASE	SOUND RATING SONES	SELECTION BASED ON GREENHECK MODEL	REMARKS
EF 1	150	0.25	85	115	60	1	1.5	SP-A250	2 4 1 3
EF 2	225	0.25	125	115	60	1	1.3	SP-A410	2 4 1 3
EF 3	350	0.25	240	115	60	1	0.9	CSP-A510	2 4 1 3

1. APPROVED MANUFACTURERS: BROAN, FANTECH, ACME, CARNES, PENN, COOK, BREIDERT, COOLAIR, CAPTIVE AIRE, S&P, GREENHECK, TWIN CITY FAN, DELTA BREEZ, AIR KING. (SUBJECT TO PROJECT DOCUMENT CONFORMANCE)
2. CONTROL WITH LIGHTS BY ELECTRICAL CONTRACTOR.
3. EXHAUST FAN SHALL HAVE INTEGRAL BACKDRAFT DAMPER.
4. WITH METAL GRILLE KIT.

ELECTRIC HEATER SCHEDULE

MARK	DESIGN GUIDE	NOMINAL BTUH	ELECTRICAL VOLTS/PH/HZ	ELECTRICAL NOMINAL LOAD WATTS	ELECTRICAL FULL LOAD AMPS	MOUNTING	REMARKS
EH 1	REZNOR ECR-3-AK2	10,240	208/1/60	3,000	14.43	CEILING	1 2 3

1. APPROVED MANUFACTURERS: BROAN, BERKO, QMARK, MARKEL, RAYWALL, REZNOR, REDD. (SUBJECT TO PROJECT DOCUMENT CONFORMANCE)
2. CONTRACTOR SHALL INSTALL EQUIPMENT AS PER MANUFACTURER'S SPECIFICATIONS.
3. FINISH SHALL BE 20 GAUGE STEEL LOUVERED WITH WHITE ENAMEL FINISH UNLESS SPECIFIED DIFFERENTLY BY ARCHITECT.
4. WALL HEATER SHALL BE PROVIDED WITH INTEGRAL THERMOSTAT, PERMANENTLY LUBRICATED MOTOR.

LMnt ARCHITECTURE

Architecture
Landscape Architecture
Land Planning
Interior Design
Construction Management
LEED Consulting

9672 South 700 East Suite 203
Sandy Utah 84070
ph. 801.987.3911
www.lmntarch.com

TRIUMPH DESIGN BUILD

SEAL:

REGISTERED PROFESSIONAL ENGINEER MARC MAKIN 8/17/20 STATE OF UTAH

project: GoEngineer T.I.
739 E Fort Union Blvd
Midvale, UT 84047

project no: 20021

date: 2020.07.06

revisions:

Permit Set

sheet: MECHANICAL SCHEDULES

M6.1

SHEET SIZE: 24" x 36"

ROYAL ENGINEERING

ELECTRICAL
1837 S. EAST BAY BLVD.
PHONE: 801.375.2228

MECHANICAL
PROVO, UTAH 84606
FAX: 801.375.2676

SECTION 23 Mechanical – GENERAL PROVISIONS
Not all specification items are used in every project.

PART 1 – GENERAL

– **Scope:**

A. Provisions of this section apply to all work specified in all sections under Division 23.

B. In addition, work in Division 23 is governed by the provisions of the Bidding Requirements, Contract Forms, General Conditions and all sections under Division 1, General Requirements.

C. Contractor is responsible for results deviating from the plans.

– **Examination of Premises:** Visit the site, verify all measurements and job conditions, and pay all costs necessary to perform the work. Coordinate division of fee responsibilities with the General Contractor.

– **The Mechanical Contractor** shall be licensed and hold a current contracting license that has been valid for a minimum of two years as a Mechanical Contractor in the State where the project is located.

– **The Mechanical Contractor** shall have a minimum of five years experience installing commercial cooling and heating systems similar to those described in these specifications and provide a list of previous projects, including name of project and contact person names and phone numbers as a separate document in addition to the mechanical bid submitted if required by the General Contractor.

– **The Mechanical Contractor** shall be able to bond work he is bidding to perform and shall provide a written statement from the bonding agency proposed to be used for this project as a separate document in addition to the mechanical bid submitted if required by the General Contractor. The bonding agency shall be one having a Best's insurance rating of A or A+.

– **Regulations, Permits, Fees, Charges, Inspections:**

A. Regulations: Comply with all applicable codes, rules and regulations. All materials and work must comply with local construction, mechanical, plumbing, electrical and fire codes. As a minimum, comply with the following: IBC, IMC, IPC, NEC, NFPA codes and all City codes.

B. In addition to the requirements of all governing codes, ordinances and agencies, conform to the requirements of the following codes and standards.
1. 2018 International Mechanical Code
2. 2018 International Building Code
3. 2018 International Energy Code
4. 2018 International Plumbing Code
5. 2018 International Energy Code
6. 2018 International Fuel Gas Code
7. ASHRAE 90.1 – 2016
***Current codes adopted by the respective jurisdiction will supercede this list of codes.

C. Fees and Permits: Pay all connection, installation, use, development, etc., fees and/or charges. Obtain and pay for all required permits and licenses. Coordinate division of fee responsibilities with the General Contractor.

D. Inspections: All work must be inspected and approved by local authorities. Prior to final approval, furnish the Architect with certificates of inspections and approvals by the local authorities in accordance with Division 1.

1. Preheat and interpass temperature shall be determined by temperature indicating crayons, contact pyrometers or other equally suitable means.

D. Postweld Heat Treatment: Postweld heat treatment for pressure components shall be as specified in Table 131 of ANSI B31.1.

– **Drawings and Specifications:**

A. Refer to Division 1 for information on submittals and shop drawings.

B. If a conflict exists between the drawings and specifications, promptly notify the Architect and Engineer.

– **Record Drawings:** Provide record drawings for all work under sections in Division 22 & 23. See Division 1 for detailed requirements covering preparation of record drawings.

– **Work and Materials:** Unless otherwise specified, all materials must be new and of the quality specified. The workmanship shall be of a quality that is acceptable to the Architect and is equal to the standards of the trades. Contractor must staff the project with sufficient skilled workmen, including a fully qualified construction Superintendent, to complete the work in the time allotted. The Superintendent must be qualified to supervise all of the work in his work category.

– **Approvals of Materials and Equipment:** Refer to Division 1 for description of material and equipment for prior approvals and substitutions. Must be received by Engineer 10 days prior to due date/bid opening.

– **Maintenance Manual:**

A. Prior to completion of the project, compile a complete equipment and maintenance manual for all equipment supplied under sections of Division 23, as described in Division 1.

B. Manuals shall be bound in a three–ring binder. A preliminary submittal of the manual shall be made to the Architect 90 days after receiving approved submittals. Final submittal of the manual shall be made four weeks prior to substantial completion of the project.

– **Equipment Purchases:** Arrange for purchase and delivery of all materials and equipment within 15 days after approval of submittals. Coordinate with General Contractor.

– **Cooperative Work:**

A. Correct without charge any work requiring alteration due to lack of proper supervision or failure to make proper provision in time. Correct without charge any damage to adjacent work caused by the alteration. See Division 1 for additional requirements.

B. Cooperative Work Includes:

1. General supervision and responsibility for proper location, rough–in and size of work related to Division 22 & 23 but provided under other divisions of these specifications.

2. Installation of sleeves, inserts and anchors bolts for work under sections in Division 23.

3. Electrical work as specified herein. Refer to Division 26 for requirements.

– **Construction Facilities:**

A. General: Under this division of the specifications execute all work in a manner to provide safe and lawful ingress and egress to the Owner's establishment and such facilities shall be kept clear of materials or equipment as directed by the Architect. Refer to Division 1 for additional requirements.

B. Furnish and maintain from the beginning to the completion of all work all lawful and necessary guards, railings, fences, canopies, lights, and warning signs. Take all necessary precautions required by city and state laws to avoid injury or damage to any and all persons and property.

– **Guarantee:** Guarantee all material, equipment, and workmanship for all sections under Division 23 in writing to be free from defects of material and workmanship for one year from date of final acceptance as outlined in Division 1. Replace without charge any material or equipment proving defective during this period. The guarantee shall include performance of the equipment under all conditions of load, installing any additional items of control and/or protective devices as required and the replacing of any refrigerant lost.

– **Mechanical Wiring:**

A. Provide all temperature control wiring, all interlock wiring, and equipment control wiring for the equipment that is to be provided under this Division unless specifically shown on electrical drawings.

B. All wiring shall be not less than No. 14 insulated, color coded wire in electrical metallic tubing. Installation shall comply with Division 26.

C. Before ordering motors, equipment, etc., verify the available voltage and phase with the electrical trades.ion 26.

– **Electrical Work:**

A. Electrical wiring, including power wiring and control wiring (except as otherwise specified under Automatic Temperature Controls), all raceways, wiring, outlet and junction boxes, and labor for installation of the wiring and equipment shall be included in Electrical Division 26 of the specifications.

B. All starters in motor control centers are to be furnished and installed under the Electrical Division of the specifications.

C. Under the Automatic Temperature Control section of these specifications, furnish and install all wiring, conduit, electric automatic temperature control devices, thermostats, relays, pneumatic electric switches, automatic control switches and pilot lights. See the Automatic Temperature Control Section, for additional detailed information.

D. All loose starters and control devices for equipment furnished under Division 23 (except as otherwise specified under Automatic Temperature Control Section) are to be furnished under that particular section of Division 23 and installed under the electrical division.

E. Contractor shall be responsible for the checking and testing of all controls and the interlocks for a complete and satisfactory operating system.

F. Before ordering any motors and equipment. Verify the available voltage and phase for all motors with the Electrical Contractor.

G. Submit a complete list of all motors prior to final closeout of job indicating the location, horsepower, voltage, phase specified in Table 132 of ANSI B.1.

H. All field wiring and equipment must conform to the applicable section of the Electrical specifications, Division 26.

– **Welding Codes and Standards:** All welding and other criteria covered by this specification shall be in accordance with the following code:

A. ASME Boiler and Pressure Vessel Code

B. Section IX ANSI Code for Power Piping: B31.1

– **Product Handling**

A. Protection: Take all precautions necessary to protect the materials of this section, before, during and after installation.

B. Replacements: In the event of damage immediately repair all damaged and defective work to the approval of the Engineer, at no additional cost to the Owner.

– **Job Conditions**

A. Examination of site: Examine the site and include in bid proposal all conditions under which work is to be performed.

– **Miscellaneous**

A. Permit and Fees: Apply and pay for all necessary permits, inspections, examinations and fees or charges required by Public Authorities having jurisdiction.

B. Locations and Accessibility: Contractor shall fully inform himself regarding peculiarities and limitations of space available for installation of work under this section. Valves, motors, controls and other devices requiring service. Maintenance and adjustments shall be placed in fully accessible positions and locations, provide access doors where required in ductwork and/or construction whether specifically detailed or not, and mender all such devices accessible.

C. Scaffolding: Furnish all scaffolding, rigging and hoisting as required for the proper execution of the work.

D. All HVAC equipment shall be labeled. Information on labels shall include: Identification number and name same as the drawings, flow and static pressure and the area to which the unit serves. Labels shall be black faced Formica with white engraved lettering at least $\frac{1}{8}$ inch high.

E. All gas fired equipment shall include a label indication that the appliance has been adjusted, modified or re–calibrated for the altitude wherein the project is to be located. The appliance shall also include a compliance statement indicating that the appliance has been adjusted, modified or re–calibrated for the proper operation at the altitude of the project and shall be listed capable for use with natural gas or propane gas if propane is listed on the drawings.

– **Submittals**

A. Shop Drawings: Within 15 days after award of contract, and before any of the materials of this section are fabricated and delivered to the jobsite, submit complete shop drawings and equipment submittals for the Engineer to review in accordance with these specifications. show all details of all ductwork and equipments pads.

B. Product Data:
1. Submit six (6) copies of all manufacturer's product data simultaneously with all shop drawings submittals.

2. Product data to include, all air conditioning equipment, hangers, fans and other standard items as required to complement shop drawings for a submittal indications products to be used on this work.

C. Record Drawings: Maintain throughout the progress of the work project record drawings and submit to the Owner.

D. Operating Manuals and Maintenance Manuals:

1. Submit four (4) copies of all operating instructions and maintenance manuals.

2. Fully instruct Owner's operating personnel and demonstrate performance, operation and maintenance of equipment. Amount of allocated for said instruction and demonstration of equipment and systems shall be part of these obligations. Submit to Engineer a letter signed by Owner's representative who will operate system stating that he has been fully instructed by contractor about operation and maintenance of equipment and system.

3. Submit one (1) additional set of approved instructions and one (1) additional set of approved control diagrams.

E. Guarantees: In addition to equipment warranties, furnish a written guarantee against defects in materials and workmanship for one year. Guarantee shall include repair of damage to, or replacement of any part of equipment or premises caused by leaks or breaks in pipe or equipment provided under this section.

– **Equipment Identification**

A. Except for individual room heating units and items furnished under temperature control all items of mechanical equipment, including fans, pumps, boilers and electrical switches and starters for mechanical equipment and gauges shall be labeled.
B. Information on labels shall include the following:

1. Identification number and name. Generally this number and name shall be the same as that shown on the drawings or in the specs.

2. If the item is a fan or pump, the flow and head shall be indicated.

3. If the item is part of a unit, the label shall have in addition to its item number, the number of the main item it is serving.

4. Valves shall be tagged with the area served and their normal operating positions shall be indicated.

5. Where the main unit is served by the valve is apparent, only the valve function needs to be included on the nameplate.

C. The types of Nameplates shall be as follows:
1. The valve tags shall be $\frac{1}{2}$" embossed aluminum tapes with identification on one side for valves. Tags for magnetic starters shall be screwed to the metal starter cover. Gags sags shall be Addressograph No. B–5300.

2. Equipment nameplates shall be black faced Formica with white engraved lettering at least $\frac{3}{16}$" high.

D. Valve tags shall be connected to valve stems by steel rings or chains. Screws shall be used for equipment labels prior to installation. The contractor shall submit to the Engineer a complete list of all valves and each item of equipment to be identified with the proper identification.

– **Fire Stopping**

A. Only tested fire stop systems shall be used.

B. Fire stop system installation must meet requirements of ASTM E–814, UL 1479 or UL 2079 tested assemblies that provide a fire rating equal to that of construction being penetrated.

C. Proposed fire stop materials and methods shall conform to applicable having codes having local jurisdiction.

D. Fire stop systems do not reestablish the structural integrity of the load bearing partitions/assemblies, or support live loads and traffic. Installer shall consult the Structural Engineer prior to penetrating any load bearing assembly.

E. For those fire stop applications that exist for which no UL tested system is available through a manufacturer, and engineering judgment derived from similar UL system design or other test will be submitted to local authorities having jurisdiction for their review and approval prior to installation. Engineer judgment drawings must follow requirements set forth by the International Fire stop Council.

F. The work of this section shall be accomplished by a single source contractor or by those contractors who, by their contract, are penetrating rated construction with their work. Regardless of responsibility the General Contractor shall be responsible to assure and verify that all products, systems, etc. used under this section are appropriate and meet the intent of this specification and is accomplished by factory trained workmen.

G. Acceptable manufacturers are subject to compliance with through penetration firestop systems (XHEZ) listed in volume 2 of the UL fire resistance directory. Provide products from the following manufacturers as identified: 1. Hilti Inc. 2. 3M Corporations. 3. Specified Technologies Inc. 4. Metacaulk, Rectorseal Corp. F. Tremco. 6. Cafco, Isolatek International. 7. Nelson Firestop Product.

H. Use only firestop products that have been UL 1479, ASTM E–814, or UL 2079 listed for specific fire–rated construction conditions conforming to construction assembly type, penetrating item type, annular space requirements and fire–rating involved for each separate instance.

I. Cast–in–place firestop devices for use with non–combustible and combustible plastic pipe (closed and open piping systems) penetrating concrete floors, the following products are acceptable:

1. HILTI CP 680 cast–in–place firestop devise.

J. Add aerator adaptor when used in conjunction with aerator ("Sovent") system.

1. HILTI CP 681 tub box kit for use with tub installations.

K. Sealants, caulking materials, or foams for use with non–combustible items including steal pipe, copper pipe, rigid steel conduit and electrical metallic tubing (EMT). The following products are acceptable:
1. HILTI FS–One Intumescent Firestop Sealant
2. HILTI CP 604 Self–leveling Firestop Sealant
3. HILTI CP 620 Fire Foam
4. HILTI CP 606 Flexible Firestop Sealant
5. HILTI CP 601S Elastomeric Firestop Sealant

L. Sealants or caulking materials for use with sheet metal ducts. The following products are acceptable:
1. HILTI CP 601S Elastomeric Firestop Sealant
2. HILTI CP 606 Flexible Firestop Sealant
3. HILTI FS–One Intumescent Firestop Sealant

M. Intumescent sealants, caulking materials for use with combustible items (penetrants consumed by high heat and flame) including insulated metal pipe, PVC jacketed, flexible cable or cable bundles and plastic pipe. The following products are acceptable:
1. HILTI FS–One Intumescent Firestop Sealant

N. Firestop collar or wrap devices attached to assembly around combustible plastic pipe (closed or open piping systems). The following products are acceptable.
1. HILTI CP 642 Firestop Collar
2. HILTI CP 643 Firestop Collar
3. HILTI CP 645 Wrap Strips

O. Materials used for complex penetrations made to accommodate cable trays, multiple steel and copper pipes, electrical busways in raceways. The following products are acceptable
1. HILTI CP 637 Trowelable Firestop Compound
2. HILTI FS 657 Fire Block
3. HILTI CP 620 Fire Foam

P. Non curing, re–penetrable materials used for large size/complex penetrations made to accommodate cable trays, multiple steel and copper pipes, electrical busways in raceways. The following products are acceptable:
1. HILTI FS 657 Fire Block

PART 2 – PRODUCTS

– **Machinery Drives:**

A. Use V–belts designed for 150% of capacity for all belt drives. For multiple belt drives, use matched sets, so marked at the factory.

B. On drives with not more than two belts, provide adjustable pitch motor sheaves with the midpoint of the adjustment range equal to that required to achieve the specified fan capacity.

C. On motors with drives with more than two belts, furnish nonadjustable sheaves, providing the specified fan capacity.

– **Machinery Accessories:**

A. Lubricating Devices: Provide all oil level gauges, oil pressure gauges, grease cups, grease gun fittings, as required by the equipment. Extend all lubricating fittings to readily accessible locations.

B. Guards: Provide totally–enclosed OSHA type belt guards for all rotating equipment. Design guards to be readily removable for access to belt drives.

– **Equipment Design and Installation:**

A. Uniformity: Unless otherwise specified, provide all equipment of same type or classification by the same manufacturer.

B. Design: Design all equipment in accordance with ASME, AGA, UL and other applicable technical standards as follows:

C. Pressures vessels – ASME Code constructed and stamped

D. Electric appliances – UL labeled

E. Fire protection equipment – UL approved and labeled

F. Fans – AMCA rated and stamped

G. Cooling equipment – ARI certified

H. Fire dampers, smoke dampers, combination fire and smoke dampers – UL listed

I. Concrete Inserts:

1. The work under this section includes furnishing and installing all concrete inserts required for all materials and equipment specified herein or in other sections of Division 23.

2. Provide concrete inserts equal to Unistrut Series 3200 with standard, plain, oiled finish. Provide exposed Unistrut pipe supports with factory finished enamel paint.

LMnt
ARCHITECTURE
Architecture
Landscape Architecture
Land Planning
Interior Design
Construction Management
LEED Consulting

9672 South 700 East Suite 203
Sandy Utah 84070
ph. 801.987.3911
www.lmntarch.com

TRIUMPH
DESIGN BUILD

SEAL:

LICENSED PROFESSIONAL ENGINEER
MARC L. MAKIN
8/17/20
STATE OF UTAH

project:
GoEngineer T.I.
739 E Fort Union Blvd
Midvale, UT 84047

project no: 20021

date: 2020.07.06

revisions:

Permit Set

sheet:
MECHANICAL SPECIFICATIONS

M7.1

SHEET SIZE: 24" x 36"

ROYAL ENGINEERING
ELECTRICAL
1837 S. EAST BAY BLVD.
PHONE: 801.375.2228
MECHANICAL
PROVO, UTAH 84606
FAX: 801.375.2676

DX Cooling/Gas Heat Packaged Roof Top Air Conditioning Unit:

A. Furnish and install package rooftop gas–fired DX air conditioning units of size and capacity shown on drawings. Units shall be factory assembled, piped, internally wired and fully charge with R–410 and designed to operate at outdoor ambient temperatures as high as 120° F. cooling and heating capacities are rated in accordance with ARI standards. Unit design to be certified by the American Gas Association (AGA), specifically for outdoor applications using natural gas. Exterior surfaces phosphatized, zinc–coated steel with epoxy resin primer and baked enamel finish.

B. Panels shall be 20–gauge steel, gasketed and insulated, on–inch, one–pound density foil faced glass fiber insulation.

C. Belt–driven, forward curved, centrifugal–type with fan equipped with adjustable motor sheaves. The motor to be thermally overload protected. Provide and install additional drives as necessary to meet CFM and static pressure requirements. Direct drive units must be provided with a variable speed drive adjustment capable of adjusting CFM's to meet CFM requirements.

D. Permanently lubricated fan and motor bearings. Fan drive components mounted on rubber–in–shear isolators.

E. Heat exchanger shall be embossed, foam and sealed, 18–gauge aluminized steel. Factory tested for gas leaks. Stress relieved, free floating design, heat exchanger to be located upstream of cooling coil. Burners shall be stamped and seamed welded 20–gauge aluminized steel. Complete with force combustion blower mounted external to air stream.

F. Filter section shall have a 2 inch Merv 8 efficiency, V–bank section.

G. Refrigeration controls to include condenser fan, evaporator fan and compressor contactors, and 24–volt transformer. Each circuit of the unit to have a separate set of refrigeration controls.

H. Units to have a 3,600 rpm hermetically sealed compressors. Compressors are equipped with over temperature, over current and high pressure and low pressure controls. Crankcase heaters as standard. Evaporator coil to have two independent circuits. Seamless copper tubing mechanically bonded to aluminum fins and factory pressure and leak tested at 225 psi. Provide non–corrosive sloped condensate pan. Evaporator pan to be internally sealed and insulated with copper drain connections for evaporator section. Condenser coils, dual circuited, seamless copper tubing mechanically bonded to aluminum fins and each coil factory pressure and leak tested at 425 psig. Condenser fans to be direct drive, statically and dynamically balanced propeller fans, weather proof fan motors UL listed with built in thermal overload protection. Provide non corrosive sloped condensate pan.

I. Unit shall have an integrated economizer capable of introducing 100% outside air and exhausting 100% room air. Economizer shall include all necessary hoods, dampers, barometric dampers, and controls to make operational. Economizer shall be capable of simultaneous economizer and compressor operations. Provide enthalpy control for economizer.

J. Unit shall be supplied with all seismic and vibration isolation required by code.

K. Each unit shall have a single point power connections. Wiring shall comply with NEC. All wiring shall be number coded per the electrical wiring diagrams. All electrical components shall be labeled according to the electrical diagram and be UL recognized where applicable. Each unit shall have a 24 volt control circuit transformer and control circuit fuse. The supply air fan compressor and condenser fan motor branch circuits shall be furnished for each compressor and condenser fan motor. The supply air fan motors shall have contactors and overload protection. Main control panels shall be weatherproof construction with hinged access panel and quick release latches. A terminal board shall be provided for the low voltage control wiring. Knockouts shall be provided in the bottom of the main control panel for field wiring entrance. Each unit shall be furnished with a factory installed starter.

L. Prefabricated roof curb shall be provided with each unit (18" minimum curb height).

Diffusers, Registers and Grilles

Air distribution equipment shall be of sizes, types, and capacities indicated.

A. Registers, grilles, and diffusers of the sizes shown on the drawings and described here in shall be furnished and installed. all grilles, diffusers and registers shall be complete with frames with rubber gaskets suitable for the area and wall construction where shown on the drawings.

B. Finish for all registers, diffusers, grilles, etc. shall be off–white unless otherwise selected by the Owner/Owner Represntative. Approved manufacturers for all air distribution products shall be Price Industries, Nailor, Metal Air, Tuttle & Bayley, Carnes, Hart and Cooley, or Anemostat.

C. Supply air shall be introduced into conditioned space in such a manner that conditioned air and room air is rapidly and evenly mixed, resulting in equalization of temperature and draftless air distribution through zone of occupancy with temperature differentials up to 25 degrees F for both cooling and heating air. Quantities and throws shall be as indicated.

D. Velocity of moving air below 5 foot level, during cooling cycle, shall not exceed limits of either 50 fpm at 1.5 degrees F below average room temperature or 70 fpm at 1 degree F below average room temperature. Velocity of moving air at the 1 foot level, during heating cycle shall not be less than 10 fpm. Temperature difference at or below the 5 foot level shall not exceed the following: 2 degrees F below average room temperature at 30 fpm, 1.5 degrees F below average room temperature at 50 fpm, 1 degree F below average room temperature at 70 fpm. Sound pressure level in all octave bands for each diffuser shall not exceed NC35 noise criteria curve at task level when units operate at designed capacities.

E. Ceiling diffusers, grilles and registers shall be independently supported from the structure so that they are not depending on the ceiling for support.

F. Ceiling diffusers may be round necked or equivalent size square neck. Provide square to round neck adapter as necessary. Flex duct shall typically connect directly to the diffuser using a 1–1/2" radius flexible duct elbow. If space does not allow for a full 1–1/2" radius to be provided, then a lined sheet metal boot shall be provided. The flexible duct shall be connected to the side of the sheet metal boot. The flexible duct shall not be connected to the top of the sheet metal boot.

G. Ceiling supply air diffusers shall be louvered faced directional diffuser model SMD manufactured by Price Industries with border type 36 for lay in ceiling or border type 1 for surface mounting in other than lay in ceilings, baked enamel finish, blow and pattern shown on the drawings.

H. Supply, exhaust, transfer and return air grilles mounted on walls 6 feet above the floor shall be Price Industries model 635, with 45–degree deflection, 1/2" blade spacing, horizontal extruded aluminum blades, baked enamel finish.

I. Supply, exhaust, transfer and return air grilles mounted on walls lower than 6 feet above the floor shall be sight–proof, heavy duty gymnasium type equal to Price Industries model 91 (or equal) with horizontal 45–degree deflection blades, 3/8" blade spacing, baked enamel finish.

J. Drum louvers shall be Price Industries model HCD (or equall) with opposed blade damper.

K. Exposed duct round diffuser shall be Price Industries model RCD (or equal), 3–position adjustment, 4 cone style, baked enamel finish.

M. Linear slot supply diffusers shall be Price Industries model SDS75, extruded aluminum frame construction with 180° range of air pattern adjustments.

N. Make up air supply diffusers shall be Price Industries model PDC perforated face ceiling diffusers, fixed 1–way air pattern, hinged removable perforated face screen, baked enamel finish.

O. Ceiling filter return air grilles in lay in ceiling shall be Price Industries model 10FF, with hinged, perforated faceplate and 1" filter for lay in T–bar application, baked enamel finish. The contractor shall provide the 1" filter.

P. Ceiling filter return grilles and transfer air grilles shall be Price Industries model PDR or PDDR perforated diffuser with removable perforated faceplate in lay in T–bar application, bake enamel finish.

Q. Ceiling return, exhaust and transfer air grilles for surface mounting in other than lay in ceilings shall be Price industries model 10F, with perforated removable faceplate, baked enamel finish.

Ducts and Sheet Metal Work

A. Provide ducts, plenums, access doors, fresh air intakes, and exhaust as indicated and required. All ductwork shall be constructed, erected and tested in accordance with the most restrictive of local regulations, procedures and detailed in the ASHRAE Handbook of Fundamentals or the applicable standards adopted by the Sheet Metal and Air Conditioning Contractors National Association (SMACNA). Provide prefabricated spiral lockseam ducts and fittings and rectangular ducts of galvanized steel. Aluminum flexible ductwork or gypsum board ductwork is not acceptable.

B. All connections to main ducts shall be made with low loss fittings.

C. Flat duct surfaces shall be crimped diagonally regardless of size. Longitudinal joints in all duct sizes may be flat lock joints. Transverse joints and intermediate bracing shall be constructed of galvanized sheet metal or galvanized structural angles in accordance with requirements of ASHRAE Guide and public authorities having jurisdiction.

D. Transverse joints on all ducts shall be sealed with mastic or tape.

E. Longitudinal joints on ducts with internal static pressures in excess of 0.75 inches of water pressure shall be sealed with mastic or tape.

F. Lock joints shall be hammered to make them airtight. Inside of duct shall present a smooth surface to flow air.

G. Changes in size of ducts shall increase gradually with a slope of not more than 12 inches in 5 feet where possible, but not more than 12 inches in 3 feet in any event.

H. Turns shall be made with throat radius of not less then the duct width.

I. Plenums shall be made of 18 gauge galvanized sheet steel reinforced horizontally on a maximum of 48" centers by 1–1/2"x1–1/4"x $\frac{1}{8}$" galvanized angles reinforced vertically by 1–1/2" standing seams.

Volume Dampers

A. Dampers used in low velocity branch ducts to control the volume of air flow shall be Young No. 817 volume damper or equal. All operating head shall be place on the side of the duct and shall locked in position by a set key where the damper is accessible. Where the damper is not accessible, Young No. 817A or 817B volume control damper or equal consisting of an end bearing or miter gear, coupling, 3/8–inch square shaft, and regulator for operating the unit from the ceiling shall be provided.

Temperature Controls

A. Thermostats shall be provided with the air conditioning units. They shall be installed and wired by the HVAC contractor. T–stats for roof top units shall be programmable with night setback and override control.

Insulation

A. Thermal/Acoustical duct insulation: Line the first 10' of supply air and return air ducts from the mechanical unit, unless otherwise specified with Knauf or equal. Duct Liner shall be mat–faced to provide a smooth air–steam surface, mold resistant, 1–1/2" thick insulation wrapped entirely around duct with joints lapped at least 2" and secured with 16 gauge galvanized wire on 12" centers. Insulation shall cover all surfaces including standing seams.

B. Rectangular supply ducts and return air ducts located on unconditioned spaces shall be lined with Knauf un–acoustic or equal. 1 inch of 1–1/2 lb. thermal resistive value of duct liner shall be a minimum of R–6. Rectangular supply ducts and return air ducts located outside the building envelope shall be lined with Knauf un–acoustic or equal. 2 inch, 1–1/2 lb. thermal resistive value of duct liner shall be a minimum of R–8. Density coated fiberglass duct liner complying with friction correction factor not greater than 1.1 at a velocity of 3000 fpm. Apply insulation to inside of ducts with an approved fire retardant adhesive to provide 100% coverage and a smooth surface. In ducts with one side more than 12" secure insulation with mechanical fasteners in addition to adhesive, spaced at 14" centers in both directions. Mechanical fasteners shall be flush with the liner surface and shall start within 2" of the leading edge of each section and within 3" of the leading edge of all cross joints of the liner shall be heavily coated with an approved fire resistant adhesive. The duct liner shall shall be cut to assure snug closing corner joints. The black surface of the liner shall face the air stream. Transverse joints shall be neatly butted and all damaged areas shall be heavily coated with a approved adhesive.

C. All duct insulation shall have an NRC rating of not less than 0.60 and a K factor of not more than 0.27. Duct dimensions shall be increased 2 inches on each side from those shown on drawings to accommodated insulation.

Ceiling Mounted Fan

A. Ceiling type exhaust fans of the capacity shown on the drawings shall be furnished and installed. Fans shall be direct drive of RPM shown and shall be complete with fan housing, inlet grille, backdraft damper and motor. Noise level shall not exceed 3.8 sones. Air quantities shall be certified by AMCA. Fans shall be from manufacturer listed in the equipment schedule.

Duct Penetrations

A. All ducts penetrating through the fire rated walls and floors shall be properly safed with Dow Corning 3–6548 silicone RTV foam or equal. Install per manufacture's directions.

Turning Vanes

A. Turning vanes shall be furnished and installed in all 90–degree turns in supply, return, mixed air and fresh air ducts, and elsewhere as shown on the drawings. Material of turning vanes shall match ductwork. Vanes are to be single blade, of size, gauge, and fabrication in accordance with SMACNA recommendations.

Equal Materials and Substitutions

A. In addition to manufacturers specified, the following shall also be considered equal. Provided corresponding models meet specified requirements. Equivalent substituted equipment named herein shall be submitted to Architect for approval. Submit alternate selections for prior approval. Must be received by Engineer 10 days prior to due date/bid opening.

Insulation:	Certainteed, Manville, Fiberglas
Air Filters:	AAF, Farr or Engineer approved equivalent.
Split System:	From manufacturers listed in the schedule.
Diffusers and Grilles:	Titus, Nailor, Price, Krueger, Hart and Cooley, Carnes, or Engineer approved equivalent.
Ceiling Exhaust Fan:	Broan, Fantech, Acme, Carnes, Penn, Cook, Breidert, Coolair, Captive aire, S&P, Greenheck, Twin City Fan, Delta Breez, Air King. (subject to project document conformance)
Roof Top Unit:	From manufacturers listed in the schedule.

Refrigerant Lines

A. Refrigerant lines are to be sized as per manufacturer's requirements. Lines to be fully insulated with 1 inch foam flex or equal. Insulation exposed to the sun shall be painted with two coats of protective paint. The system is to be evacuated to 200 microns, hold vacuum 24 hours. Break with freon and leak test with halide detector. Each heat pump to be provided with a refrigerant line kit.

Split System Indoor Fan Coil Unit

Model of size and capacity indicated. Units shall be completely assembled and tested complete with refrigerant charge and ready to operate. Unit shall be UL listed and carry a UL label.

A. Cabinet shall be constructed of galvanized steel, bonderized and coated with a baked enamel finish. Cabinet interior shall be insulated with 1 inch thick neoprene coated fiberglass. Cabinet panels shall be easily removable for service to all operating components.

B. Indoor air fans shall be forward–curve centrifugal, multi–speed type.

C. Coils shall be of nonferrous construction with aluminum plate fins mechanically bonded to seamless copper tubes with all joints brazed.

D. Primary and secondary drain connections with brass inserts. Condensate drains shall be trapped outside the cabinet.

E. Factory installed electric heater as noted in schedules and/or on drawings.

F. Shipped with cleanable, permanent frame filter.

Split System Outdoor Heat Pump Unit

Model of size and capacity indicated. Units shall be complete assembled and tested complete with refrigerant charge and ready to operate. Total unit shall be UL listed and carry a UL label

A. Cabinet shall be constructed of galvanized steel, bonderized and coated with a power coat paint.

B. Coils shall be of nonferrous construction with aluminum plate fins mechanically bonded to seamless copper tubes with all joints brazed.

C. Compressors shall be hermetically sealed. Compressor will be mounted on rubber vibrations isolators.

D. Refrigerant circuit components shall include the following: Liquid tube shutoff valve with seat connections, suction tube shutoff valves with sweat connections, system charge of refrigerant R410, Compressor oil, accumulator, freezestat, and reversing valve.

E. Compressor fans shall be direct drive propeller type, discharging air upward. Fan motors shall be totally enclosed, 1–phase type class B insulation and permanently lubricated bearings, shafts shall be corrosion resistant. Fan blades shall be statically and dynamically balanced. Condenser fan openings shall be equipped with steel wire safety guards.

High Wall Fan Coil Unit

A. Furnish and install indoor, wall–mounted, direct expansion, fan coil unit to be used without ductwork. Unit shall consist of tangential, direct–drive fan. Fan motor, cooling coil, piping connections, electrical controls, microprocessor control system, integral temperature sensing, and factory–supplied mounting bracket. Unit shall be capable of being used in a refrigerant circuit with a matching air–cooled outdoor condensing unit. Cabinet discharge and inlet grilles shall be attractively styled, high impact polystyrene. Cabinet shall be fully insulated for improved thermal and acoustic performance. Fan shall be tangential direct–drive blower type with air intake at the upper front face of the unit and discharge at the bottom front. Automatic, motor–driven vertical air sweep shall be provided standard. Air sweep operation shall be user selectable. Horizontal direction may be manually adjusted and vertical air sweep may be manually set. Coil shall be copper tube with aluminum fins and galvanized steel pan under the coil shall have a drain connection for hose attachment to remove condensate. Condensate pan shall have internal trap and auxiliary drip pan under coil header. The size oo9 and 012 units shall use capillary tubes in the outdoor unit for refrigerant control, and the size 018, 024 units shall use an accessory accurater piston refrigerant metering device in the indoor unit. Provide the following functions as a minimum: automatic restart, a timer function, temperature–sensing controls, evaporative coil, freeze protection, wireless infrared remote control, auto stop features, automatic air sweep control, dehumidification mode, fan–only operation, diagnostics, user–selectable fan speed control, and compressor restart time delay. Unit shall be rated per ARI standards 210/240 and shall be listed in the ARI directory matched system. Units shall be UL listed. Provide equipment from manufacturers listed in the equipment schedule.

Automatic Temperature Control Damper

A. The ATC contractor shall furnish all automatic control dampers. The sheet metal contractor shall transition all ductwork to the dampers. All modulating dampers shall be parallel type and the blade width shall not exceed 8 inches. Dampers shall have BUTYL rubber blace and end seals with adjustable linkage to provide equal percentage characteristics. Linkage to be mounted inside channels of the frame. Bushings to be oil impregnated sintered iron turning in nylon bearings. Frame of the damper to be frilled by the damper manufacturer to accommodate direct mounting to the operators. All operators shall be mounted external of the airflow, and be easily accessible for service. Leakage to be less than 1% with 2000 FPM and 6: W.G. static across the dampers. All dampers submitted shall show engineering data to substantiate above specifications are met. Dampers shall be Ruskin CD050, Johnson D–1100, D–1200, D–1300 series, Honeywell D643 series (not LS), American Warmi9ng and Ventilating, Air Balance or Cesco.

B. The temperature control contractor furnishes all automatic dampers. The sheet metal contractor under the supervision of the control contractor shall install them.

Electric Heater

A. The heating equipment shall include and electric automatic fan forced air heater suitable for small area heating. The heater shall be designed for wall mounting, recess or surface. Heaters shall be UL listed.

B. Backbox: the backbox shall be designed for duty as a recessed rough–in box in either masonry or frame installations and is also used with the surface mounting frame in surface mounting installations. The backbox shall be heavy gauge galvanized steel and shall contain knockouts through which power leads are brought.

C. Inner frame assembly: The heater assembly which fits into the backbox shall consist of a heavy gauge steel fan panel upon which is mounted all of the operational parts of the heater. The inner frame assembly shall be completely pre–wired.

D. Heating element: The heating element shall be of the non–glowing design consisting of an 80/20 nickel–chromium resistance wire enclosed in a steel sheath to which plate fins are copper brazed. It shall be warranted for 5 years. The element shall cover the entire air discharge area to ensure uniform heating of all discharge air.

E. Motor and controls: The fan motor shall be impedance protected, permanently lubricated and with totally enclosed rotor. Fan control shall be of the bi–metallic, snap–action type and shall activate fan after heating element reaches operating temperature, and continue to operate the fan after the thermostat is satisfied and until all heated air has been discharged. The thermostat shall be single pole type on all models. Thermal cutout shall be bi–metallic, snap–action type designed to shut off heat in the event of overheating. The fan shall be five–bladed aluminum. The fan motor shall be totally enclosed.

F. Surface mounting frame: The surface mounting frame shall be of heavy gauge steel designed to mount around the backbox for a finished surface installation. Slot knock outs shall be provided for power supply conduit.

G. Front cover: The louvered front cover shall be of heavy gauge steel with a powder paint finish. A plug button will be provided to replace the thermostat knob and render the unit tamper–resistant.

H. Finish: All sheet metal parts, except the galvanized steel backbox, shall be phosphatized, then completely painted by a powder paint process. Heater shall be from the manufacturers listed in the equipment schedule.

Motorized Volume Dampers

A. Motorized dampers used in low velocity branch ducts to control the volume or air flow shall be Carrier model Damprnd–B for round ducts and Damprec–B rectangle ducts or equal.

LMnt ARCHITECTURE

Architecture
Landscape Architecture
Land Planning
Interior Design
Construction Management
LEED Consulting

9672 South 700 East Suite 203
Sandy Utah 84070
ph. 801.987.3911
www.lmntarch.com

TRIUMPH DESIGN BUILD

SEAL:

LICENSED PROFESSIONAL ENGINEER MARC MAKIN 8/17/20 STATE OF UTAH

project:
GoEngineer T.I.
739 E Fort Union Blvd
Midvale, UT 84047

project no: 20021

date: 2020.07.06

revisions:

Permit Set

sheet:

MECHANICAL SPECIFICATIONS

M7.2

SHEET SIZE: 24" x 36"

ROYAL ENGINEERING

ELECTRICAL
1837 S. EAST BAY BLVD.
PHONE: 801.375.2228

MECHANICAL
PROVO, UTAH 84606
FAX: 801.375.2676

High Efficiency Branch Take–Offs

A. Expanded throat high efficiency takeoffs shall be used for all branch takeoffs unless shown otherwise on the drawings. an opposed blade volume damper with locking quadrant shall be provided at each branch takeoff. Where dampers are not accessible for adjustment from above, concealed ceiling regulators with adjustable chrome–plated covers shall be provided. High efficiency take–offs shall be Hercules, Southwark or equal.

PART 3 – EXECUTION

Verification of Dimensions:

A. Scaled and figured dimensions are approximate only. Before proceeding with work, carefully check and verify dimensions at site, and be responsible for properly fitting equipment and materials together and to the structure in spaces provided.

B. Drawings are essentially diagrammatic and many offsets, bends, special fittings and exact locations are not indicated. Carefully study drawings and premises in order to determine best methods, exact locations, routes, building obstructions, and install apparatus and equipment in available locations. Install apparatus and equipment in manner and in locations to avoid obstructions, preserve headroom, and keep openings and passageways clear.

Cutting and Patching:
Cut work and patch per Division 1 as necessary to properly install the new work. As the work progresses, coordinate necessary openings, holes, chases, etc., in their correct location. If the required openings, holes and chases are not in their correct locations, make the necessary corrections at no cost to the Owner. Avoid excessive cutting and do not cut structural members without the consent of the Architect. Patching by General Contractor at Mechanical, Plumbing or Fire Protection Contractor's expense. Include as a part of the work under this contract all structural framing required by penetrations through the roof and necessary steel to support ducts and pipes between structural steel unless shown on the structural drawings.

Closing–in of Unfinished Work:
Cover no work until inspected, tested and approved. Where work is covered before inspection and test, uncover it, and when inspected, tested and approved, restore all work to original proper condition.

Excavation and Backfill:

A. Perform all necessary excavation, shoring and backfilling required for the proper laying of all pipes and conduits inside the building and premises, and outside as may be necessary. Conform to Division 2 requirements. Remove all excess excavated materials from the site or dispose of on site as directed by General Contractor.

B. Excavate all trenches open cut, keep trench banks as nearly vertical as practicable, and sheet and brace trenches where required for stability and safety. Excavate trenches true to line and make bottoms not less than 18" wide but no wider than necessary to provide ample work room. Grade trench bottoms accurately to provide uniform bearing and support for each section of pipe on undisturbed soil along its entire length. Dig "bell" holes after the trench bottom has been graded. Machine grade only to the top line of the pipes, doing the balance by hand. Do not cut any trench near or under footings without first consulting the Architect. Comply with OSHA requirements.

C. Provide backfilling and compaction in accordance with requirement of Division 2 and under the direction of the Architect and the Owner's testing firm to the required density. Make the first 2 feet of fill in 6" layers, each thoroughly compacted as directed, and free from rocks, large clods of earth, leaves, branches, and debris. Compact the rest of the backfill to prevent settlement as directed, using in the backfill no rocks larger than 4" in diameter, and using no rocks at all in the top 12".

Accessibility:

A. Install valves, dampers, thermometers, gauges, traps, cleanouts, control devices or other specialties requiring reading, adjustment, inspection, repairs, removal or replacement conveniently and accessibly throughout the finished building. Where any of these devices are shown on the contract drawings to be installed above any inaccessible ceiling, the Mechanical Contractor shall furnish access doors or panels as required.

B. All access doors or panels in walls and ceilings required for access to control devices, traps, valves and similar devices are to be furnished and installed as part of the work under this section. Provide type as specified under Division 8.

C. Provide ducts which pierce a fire separation with fire dampers of same fire rating as the separation.

D. Refer to drawings and "Finish Schedule" for type of wall and ceiling in each area and for rated construction.

E. Coordinate work of various sections to locate valves, traps, and dampers with others to avoid unnecessary duplication of access doors.

Roof Flashings:
Flash and counterflash all piping, conduits and ductwork penetrating roofing membrane with flashing per roofing manufacturer's recommendations. Refer to architectural and mechanical drawings for detailing of duct and pipe penetrations through roof.

Equipment Rough–in:

A. Rough in all equipment and fixtures as designated on the drawings and in the specifications. The drawings indicate only the approximate location of rough–ins. The exact rough–in locations must be determined from large–scale certified drawings. The Contractor shall obtain all certified rough–in information before progressing with any work for rough–in final connections.

B. Contractor shall provide all outlets and services of proper size at the required locations.

C. Minor changes in the contract drawings shall be anticipated and provided for under this division of the specifications.

D. Rough–in only (unless otherwise designated on the drawings) shall include the following:
D.1. Mechanical: Provide all services as indicated and required, including all ductwork, piping and valves. Valve and cap all piping stub–outs. Cap all ductwork stub–outs in a manner suitable for future extension.

E. Mechanical equipment installed on the roof shall not be installed any closer than 10'–0" to the edge of the roof unless there is a 42" high parapet or equipment guardrail.

Owner–Furnished and Other Equipment:

A. Rough–in only for all Owner–furnished equipment (see Division 1) and all equipment furnished under other sections of the specifications, except as otherwise specified and/or noted on the drawings.

Equipment identification

A. All major equipment shall bear firmly attached metal nameplates which state name of manufacturer, model number and electrical data.

Discrepancies

A. In the event of discrepancy, immediately notify the Owner.

B. Do not proceed with installation in areas of discrepancy until all such discrepancies have been fully resolved.

Initial Lubrication, Adjusting, and Filling Systems

A. Before operating any mechanical system, equipment bearings shall be lubricated and bolts, pulleys, and other moving parts checked for alignment and tolerances in accordance with manufacturer's operating instructions. Vibrations and noise shall be suppressed.

Cleaning of Equipment, Materials and Premises

A. Be painted smooth and clean, ready for painters. Clean entire premises of unused materials, rubbish, debris, grease spots and dirt left by subcontractor.

Equipment and Material

A. Install all equipment and material per manufacturer's recommendations.

Accessibility

A. Install work readily accessible for normal operation, reading of instruments, adjustment, service inspection and repair, provide access panels where indicated and required. Access panels shall be the responsibility of respective subcontractors.

B. Provide all services designated, valve and cap all piping, cap all waste piping and ductwork and leave in a clean and orderly manner.

C. Rough–in requirements shall be as outlined in the preceding paragraph titled "Equipment Rough–In."

Machinery Drives: After tests have been performed on the air conditioning and air handling systems, make without cost no more than two changes in the size of the nonadjustable sheaves to obtain the required air quantities.

Machinery Accessories:

A. Application: Do not install any equipment in an application not recommended by the manufacturer.

B. Installation: Align, level and adjust all equipment for proper operation. Install so connecting and disconnecting of piping and accessories can readily be done and so all parts are readily accessible for inspection, service and repair. Install equipment in accordance with manufacturer's recommendations.

Pipe and Equipment Supports:

A. Where supports, foundations, stands, suspended platforms for machinery, tanks, or other equipment are indicated or specified, perform the following:

A.1. Locate support members to avoid equipment strains and interference with piping connections, tube pulling or other maintenance operations.

A.2. Where saddles are required, use cast iron or welded steel saddles with curvature to fit the tank shell.

A.3. Mount power–driven equipment on common base with driver.

B. Concrete Inserts: Furnish and install all concrete inserts required for all materials and equipment specified and/or shown on the drawings for Division 22.

C. Concrete Foundations: Work under this section includes coordination of construction of all concrete foundations indicated or required for equipment specified herein or in other sections under Division 22. Materials and workmanship shall be described under Division 3.

D. Grout under all equipment after leveling, filling completely the space between machinery bed plate and foundation surface as specified in Division 3. Finish exposed surface of grout for a neat appearance.

E. Floor Stands: Where equipment is mounted standard or on legs, construct of structural steel or steel pipe and fittings, cross–brace and fasten with flanges or plates bolted to floor.

F. Ceiling or Wall Supports: Use suspended platform, strap hangers, bracket or shelf, whichever is most suitable for equipment and location. Construct of structural steel members, steel plates, rods or pipe as required. Cross–brace and fasten to building structure or inserts in an approved manner.

G. Steel Work: Neatly fabricate and erect steel work with burrs and welding spatter ground off. Paint after fabrication with a rust–inhibitive primer.

H. Roof Mounted Equipment (Steel Supported): Provide curbs and flashings for metal support structures as shown in the latest SMACNA manual for roof supports.

Cleanup:

A. In addition to cleanup specified under Division 1, thoroughly clean all parts of the equipment. Where exposed parts are to be painted, thoroughly clean off any splattered construction materials and remove all oil and grease spots. Wipe the surface carefully and scrape out all cracks and corners.

B. Thoroughly flush and clean out all water circulating systems. Remove, clean and replace all strainer elements.

C. During the progress of the work, keep the premises clean and free of debris.

Painting:

A. Except as otherwise specified or indicated in the architectural drawings and/or specifications, paint all exposed unfinished metal with one coat of rust–inhibiting primer. (Galvanized ductwork and factory painted equipment shall be considered as having primed surface.)

B. Finished painting is specified under Division 9.

Objectionable Noise and Vibration: Construct and brace the metal partitions, ducts and sheet metal housings to prevent vibration or rattling when systems are in operation. Install connections to equipment so noise and vibration will not reach the conditioned area through ducts, piping, conduit, sheet metal work, or the building structure. Provide power–driven equipment suspended from the structure with spring type isolation.

Welding:

A. Procedures:

A.1. All procedures and welders must be qualified in accordance with the requirements of Section IX, ASME Boiler and Pressure Vessel Code and ANSI code for power piping B31.1. Procedure qualification test records and acceptance shall be submitted with the welding procedure prior to the start of fabrication.

A.2. Architect's inspector or authorized representative will review performance qualification records of individual welders.

B. Welding Processes: The following welding processes are permitted, provided that the procedure is qualified in accordance with Section IX, ASME Boiler and Pressure Vessel Code.

B.1. Manual shielded metal–arc.

B.2. Gas tungsten–arc.

B.3. Other welding processes may be used providing they are qualified in accordance with Section IX, ASME Boiler and Pressure Vessel Code.

C. Restrictions: Weld bevel preparations shall be provided on all welding fittings and shall be machined or ground to remove all discoloration if flame or arc cut.

D. Welding Filler Material:

D.1. A filler material control procedure shall be submitted to Owner for review and acceptance prior to performing any welding.

D.2. All shielded metal–arc welding shall be performed using low–hydrogen type electrodes such as E 7018.

E. Preheat and Interpass Temperature:

F. Preheat for pressure components shall be as specified in Table 132 of ANSI B.1.

Equipment Final Connections:

A. Provide all piping and duct final connections for all equipment under Division 22 & 23 as required herein specified and indicated on the drawings.

B. Air Conditioning, Heating, and Ventilating: Provide final connections complete with necessary valves, drains, unions, flanges and duct connections for equipment furnished and installed under other sections of the specifications, except as otherwise designated. Included under the HVAC sections of the specifications are the final connections to the following:

B.1. Condensate and evaporative cooler drain piping from air conditioning equipment.

B.2. Supply, return, relief, outside air and exhaust duct connections for all equipment including exhaust fans.

B.3. Piping connections for all equipment.

B.4. Duct connections for all kitchen hoods.

System Balancing

A. Balancing work included:

A.1. Complete testing and balancing of the HVAC system as herein specified.

B. Verification of Conditions: Prior to testing and balancing, inspect equipment and materials and arrange with contractor for satisfactory correction of all defects in workmanship and/or material that could affect the work specified herein.

C. Protection: As specified herein.

D. System Operation: contractor shall put all parts of systems in full operation and shall continue to operation of same during each working day of testing and balancing.

E. Test Data: Submit copy of test data to Owner on completion of work under this section.

F. Test and balance contractor shall certify in writing that system has been adjusted and balanced and design conditions have been attained in all areas of the building.

G. Instruments: Instruments used by contractor shall be accurately calibrated and maintained in good working order.

H. Air Distribution Testing and Balancing:

H.1. Test and record motor full load amperes and RPM.

H.2. Test and record system static pressures, suction and discharge.

H.3. Adjust all supply and return air ducts to proper design CFM.

H.4. In cooperation with the control manufacturer's representative, the setting adjustment of automatically operated controls to operate as specified indicated and/or noted.

I. Witness: Notify Owner in writing two weeks prior to testing and balancing of all major equipment in order to arrange that Owner's representative will witness the test.

Operation

D. Place system in operation and regulate and adjust to Owner's satisfaction. System shall operate quietly and without vibration or noise.

E. Contractor shall make necessary field adjustments for even temperatures throughout the project.

Certification

A. Upon completion, the contractor shall inspect work of this section and deliver to Owner a written certification that installed materials and workmanship conform to specifications.

LMnt ARCHITECTURE

Architecture
Landscape Architecture
Land Planning
Interior Design
Construction Management
LEED Consulting

9672 South 700 East Suite 203
Sandy Utah 84070
ph. 801.987.3911
www.lmntarch.com

TRIUMPH DESIGN BUILD

SEAL:

REGISTERED PROFESSIONAL ENGINEER MARC MAKIN 8/17/20 STATE OF UTAH

project:
GoEngineer T.I.
739 E Fort Union Blvd
Midvale, UT 84047

project no: 20021

date: 2020.07.06

revisions:

Permit Set

sheet:

MECHANICAL SPECIFICATIONS

M7.3

SHEET SIZE: 24" x 36"

ROYAL ENGINEERING

ELECTRICAL
1837 S. EAST BAY BLVD.
PHONE: 801.375.2228

MECHANICAL
PROVO, UTAH 84606
FAX: 801.375.2676

PLUMBING SYMBOLS

NOTES:
1. ALL SYMBOLS MAY NOT BE USED.
2. DOTTED SYMBOLS INDICATE EXISTING EQUIPMENT, ETC

—SS—	SANITARY OR WASTE PIPING
— — — — — — — —	VENT PIPING
—CW—	COLD WATER PIPING
—HW—	HOT WATER PIPING
—GAS—	GAS PIPING
—SD—	STORM DRAIN PIPING
—RD— —RD—	ROOF DRAIN PIPING
—ORD— —ORD—	OVERFLOW ROOF DRAIN PIPING
—GR—	GREASE PIPING
—RW—	RECIRCULATION WATER PIPING
○	PIPE RISER OR FIXTURE CONNECTION
┼	WALL HYDRANT/HOSE BIB
●	FLOOR DRAIN
▣	AREA DRAIN
◎	ROOF DRAIN
ø	ROUND MEASUREMENT.
P-#	PLUMBING FIXTURE SYMBOL
M #	MECHANICAL EQUIPMENT SYMBOL
#	KEYED NOTE REFERENCE
PRV	PRESSURE REDUCING VALVE STATION
⋈	GATE VALVE & BACKFLOW PREVENTOR

DESIGN CONTACTS

MECHANICAL ENGINEER:	MARK MAKIN
MECHANICAL PROJECT MANAGER:	CHRIS FALSLEV
MECHANICAL DESIGNER:	TRE PRESSON

SHEET INDEX

PROJECT PLUMBING NOTES:

1. PIPING SCHEMATIC(S) FOR ADDITIONAL INFORMATION ON WASTE & VENT, GAS AND CULINARY WATER PIPING DIAMETERS.
2. COORDINATE ALL WORK WITH OTHER TRADES AS REQUIRED. CONCEAL ALL PIPING IN FINISHED AREAS.
3. PROVIDE AND INSTALL ALL REQUIRED VALVES IN PIPING SYSTEM. REMOVE OR RELOCATE ANY EXISTING PLUMBING FIXTURES & ASSOCIATED PIPING IN CONFLICT WITH THIS PLUMBING PLAN. COORDINATE ALL REQUIREMENTS WITH OWNER REPRESENTATIVE. EXTEND OR REMOVE & TERMINATE ANY PIPING AS REQUIRED. MAINTAIN FUNCTIONALITY OF ALL DOWNLINE FIXTURES. RETURN ANY REMOVED FIXTURES & PIPING TO OWNER REPRESENTATIVE OR DISPOSE FIXTURES AND PIPING AS DIRECTED BY OWNER REPRESENTATIVE. VERIFY ALL ITEMS WITH OWNER REPRESENTATIVE.
4. MAKE CONNECTION TO EXISTING WATER SUPPLY LINE. FIELD LOCATE AND VERIFY SIZE AND ALL REQUIREMENTS. 1-1/2" WATER METER MINIMUM. 2"ø MAIN WATER SUPPLY LINE MINIMUM. VERIFY PROPER FUNCTION OF EXISTING MAIN SHUT-OFF, PRV, ETC. (FIELD VERIFY LOCATION) AND REPAIR/REPLACE AS REQUIRED UNDER DIRECTION OF OWNERS REPRESENTATIVE.
5. MAKE CONNECTION TO EXISTING SEWER LINE(S). MODIFY SEWER LINE TO ACCOMMODATE NEW PLUMBING FIXTURES. PROVIDE AND INSTALL ALL REQUIRED CLEANOUTS.
6. MAKE CONNECTION TO EXISTING NATURAL GAS LINE. VERIFY SIZE AND ALL REQUIREMENTS. SEE PLANS FOR MINIMUM MAIN GAS PIPE SIZE. SEE GAS PIPING SCHEMATICS FOR SYSTEM PRESSURE.
7. WHERE REQUIRED PLUMBING CONTRACTOR SHALL PROVIDE AND INSTALL 2 POUND TO 4 OUNCE PRESSURE REGULATORS WITH LEAK-LIMITING DEVICE AND TEST TEE FITTING. IFGC 410.
8. COORDINATE ALL REQUIRED SAW CUTTING OF EXISTING FLOOR OR SLAB FOR DRAIN PIPING, ETC. WITH GENERAL CONTRACTOR. REPAIR FLOOR OR SLAB AS DIRECTED BY OWNER REPRESENTATIVE. PROVIDE AND INSTALL EPOXY DOWELS AT SLAB TO SLAB JOINTS.
9. INSULATE ALL HOT AND COLD WATER PIPING PER APPLICABLE CODES. ALL EXPOSED HOT AND COLD WATER PIPING SHALL BE INSULATED. INSULATE HOT WATER PIPING THAT IS PLACED IN UNINSULATED INTERIOR WALLS. EXCEPTION: VERTICAL AND HORIZONTAL COLD WATER PIPING LOCATED INSIDE OF INTERIOR WALLS MAY HAVE THE INSULATION OMITTED.
10. MAKE PROVISIONS FOR A TRAP GUARD WHERE NOTED AND/OR CALLED FOR.
11. PIPING LOCATIONS ARE GRAPHICALLY SHOWN. PLUMBING CONTRACTOR SHALL DETERMINE ACTUAL PIPE ROUTING IN FIELD PER AVAILABLE SPACE AND BUILDING CONSTRUCTION.
12. NOT ALL CLEANOUTS ARE SHOWN. PROVIDE AND INSTALL ALL REQUIRED CLEANOUTS. CLEANOUTS FOR HORIZONTAL DRAINS SHALL BE INSTALLED NO MORE THAN 100' APART. CLEANOUTS SHALL BE INSTALLED AT EACH CHANGE OF DIRECTION GREATER THAN 45°. A CLEANOUT SHALL BE PROVIDED AT THE BASE OF EACH WASTE OR SOIL STACK. CLEANOUTS SHALL BE ACCESSIBLE AND THE SAME SIZE AS THE WASTE LINES ON WHICH THEY ARE INSTALLED.
13. COORDINATE WITH OTHER TRADES TO ENSURE AND ALL PLUMBING VENTS ARE A MINIMUM OF 10-FEET FROM ALL FRESH AIR INTAKES.
14. WATER PIPING MATERIAL SHALL MEET THE STANDARDS SET FORTH IN 2018 IPC TABLES 605.3, 605.4 & 605.5.

PIPING SEISMIC SUPPORT NOTES:

1. PER ASCE STANDARD 7-16 SEISMIC SUPPORTS ARE NOT REQUIRED FOR THE FOLLOWING CONDITION:
   - 1.1. PIPING IS SUPPORTED BY ROD HANGERS 12" OR LESS IN LENGTH FROM THE TOP OF THE PIPE TO THE SUPPORTING STRUCTURE.
   - 1.2. HIGH-DEFORMABILITY PIPING IS USED.
2. IF INSTANCES OCCUR WHERE PIPING IS SUSPENDED BY HANGERS GREATER THAN 12" IN LENGTH, SYSTEM CONNECTORS AND COMPONENTS SHALL BE COMPATIBLE AND DESIGNED FOR THE APPLICATION THAT THEY ARE USED FOR. SHALL HAVE A MINIMUM OF TWO TRANSVERSE BRACES PER STRAIGHT PIPING RUN. THE MAXIMUM DISTANCE BETWEEN TRANSVERSE BRACES WILL BE DETERMINED BY PIPE SIZE AND PIPING COMPOSITION. SHALL HAVE A MINIMUM OF ONE LONGITUDINAL BRACE PER STRAIGHT DUCT RUN. IF LENGTH OF PIPING EXCEEDS LONGITUDINAL BRACE SPACING, ADDITIONAL LONGITUDINAL BRACES WILL BE REQUIRED.
3. FOR SEISMIC BRACING OF PLUMBING EQUIPMENT AND PIPING AN INDEPENDENT SEISMIC AND VIBRATION CONTROL SUBCONTRACTOR WITH EXPERIENCE, COMPUTING CAPABILITIES, AND MANUFACTURED PRODUCTS SHALL BE FURNISHED BY PLUMBING CONTRACTOR. INDEPENDENT SEISMIC CONSULTANT SHALL PROVIDE REQUIRED COMPUTATIONS, SHOP DRAWINGS, AND MANUFACTURED PRODUCTS TO MEET THE MINIMUM REQUIREMENTS OF ASCE 7-10 AND INTERNATIONAL BUILDING CODES (LATEST ADOPTED EDITION) FOR THE RESPECTIVE SEISMIC DESIGN FOR SEISMIC ZONE WITH IMPORTANCE FACTOR 1.5. SEISMIC SUBCONTRACTOR SHALL EXERCISE THE QUALITY CONTROL FOR THIS WORK AND SHALL NOT BE LIMITED TO INSTRUCTIONS DIRECTED TO THE PLUMBING CONTRACTOR. THE SEISMIC SUBCONTRACTOR SHALL CERTIFY IN WRITING THAT THEY HAVE INSPECTED THE INSTALLATION AND THAT ALL ISOLATION ANCHORS AND SEISMIC RESTRAINT MATERIALS ARE INSTALLED CORRECTLY AND FUNCTIONING PROPERLY. CERTIFICATION SHALL BE PROVIDED AFTER ALL CORRECTIVE WORK HAS BEEN COMPLETED

PROJECT PLUMBING NOTES:

15. SANITARY WASTE AND VENT PIPING MATERIAL SHALL MEET THE STANDARDS SET FORTH IN 2018 IPC TABLES 702.1, 702.2 AND 702.3 & 702.4.
16. NATURAL GAS PIPING MATERIAL SHALL MEET THE STANDARDS SET FORTH IN 2018 IFGC SECTION 403.
17. PROVIDE AND INSTALL WATER HAMMER ARRESTORS WHERE QUICK-CLOSING VALVES ARE UTILIZED. THIS INCLUDES BUT IS NOT LIMITED TO: ICE MAKERS, DISHWASHERS, FLUSH VALVE TOILETS AND URINALS.
18. TRENCHES THAT ARE EXCAVATED BELOW THE INSTALLATION LEVEL OF PIPE (SUCH THAT THE TRENCH BOTTOM DOES NOT FORM THE BED FOR THE PIPE) SHALL BE BACKFILLED TO THE INSTALLATION LEVEL OF THE BOTTOM OF THE PIPE WITH SAND OR FINE GRAVEL PLACED IN LAYERS OF 6 INCHES MAXIMUM DEPTH. THE BACKFILL SHALL BE COMPACTED AFTER EACH PLACEMENT. 2018 IPC 306.2.1.
19. PROVIDE AND INSTALL MARKING/LOCATING TAPE FOR ALL BURIED GAS LINES.
20. PLUMBING CONTRACTOR SHALL PROVIDE AND INSTALL WATER TEMPERING DEVICE (SHALL CONFORM TO ASSE 1070) FOR ALL PUBLIC HAND WASH AREAS IN PROJECT. HOT WATER TEMPERATURE SHALL HAVE A MAXIMUM TEMPERATURE OF 110° F. 2018 IPC 607.1.2.
21. SHOWER CONTROL VALVES. INDIVIDUAL SHOWER AND TUB/SHOWER COMBINATION VALVES SHALL BE EQUIPPED WITH CONTROL VALVES OF THE PRESSURE-BALANCE, THERMOSTATIC-MIXING OR COMBINATION PRESSURE-BALANCE/ THERMOSTATIC-MIXING VALVE TYPES WITH A HIGH LIMIT STOP IN ACCORDANCE WITH ASSE 1016. THE HIGH LIMIT STOP SHALL BE SET TO LIMIT WATER TEMPERATURE TO A MAXIMUM OF 120°F. IN-LINE THERMOSTATIC VALVES SHALL NOT BE USED TO MEET THIS REQUIREMENT (2018 IPC 412.3, 2018 IRC P2708.4). INSTALL SHOWER HEADS 80" ABOVE FINISHED FLOOR.
22. FOR PROJECTS LOCATED IN UTAH THE PLUMBING CONTRACTOR IS RESPONSIBLE TO PROVIDE LOW NOx LISTED GAS FIRED WATER HEATERS WITH A LIMIT OF NITROGEN OXIDE TO 10 NANOGRAMS PER JOULE OF HEAT OUTPUT OR 15 PPM (CORRECTED TO 3% OXYGEN). COORDINATION WITH MECHANICAL CONTRACTOR FOR FLUE/PIPING INSTALLATION WILL BE REQUIRED.
23. THE PLUMBING CONTRACTORS SHALL ENSURE THAT LENGTH OF VENT PIPING FOR ALL WATER HEATERS WITH POWER DIRECT EXHAUST DOES NOT EXCEED MANUFACTURERS SPECIFICATIONS. IF THE VENT WILL EXCEED MANUFACTURERS RECOMMENDED VENTING LENGTH WATER HEATERS CAPABLE OF SIDEWALL VENT PIPING WILL BE REQUIRED. COORDINATION FINAL VENTING LOCATION WITH OWNER REPRESENTATIVE.
24. PLUMBING CONTRACTOR TO PROVIDE AND INSTALL BACKFLOW PREVENTER AT ALL HOSE BIB LOCATIONS.
25. PAINT ALL EXTERIOR GAS PIPING WITH WEATHER RESISTANT PAINT.
26. PLUMBING CONTRACTOR SHALL VISIT THE PROJECT SITE DURING THE BIDDING PROCESS.
27. CONTRACTOR SHALL VERIFY LOCATION, SIZE, AND DEPTH OF ALL UTILITIES PRIOR TO BEGINNING OF CONSTRUCTION. CONTRACTOR TO PROVIDE ALLOWANCE/ALTERNATE TO CAMERA EXISTING SEWER PIPING TO DETERMINE THE MOST COST EFFECTIVE SOLUTION FOR SEWER ROUTING.
28. PLUMBING CONTRACTOR SHALL PROVIDE AND INSTALL PVC WATER HEATER VENTING PER MANUFACTURERS RECOMMENDATIONS. COORDINATE TERMINATION LOCATIONS WITH MECHANICAL CONTRACTOR FOR ALL REQUIRED CLEARANCES PER CURRENT BUILDING CODES (IE. 10' FROM ALL FRESH AIR INTAKES AND 3' FROM ALL OPERABLE OPENINGS).

SUBMITTAL NOTES:

1. CONTRACTOR TO ALLOW 10 WORKING DAYS FOR SUBMITTAL TURNAROUND.
2. CONTRACTOR TO PROVIDE SUBMITTALS FOR ALL EQUIPMENT AND MATERIALS IN A SINGLE PACKAGE. PIECEMEAL SUBMITTALS WILL BE RETURNED WITH A NOTE TO REVISE AND RESUBMIT.
3. SUBMITTALS WILL BE CHECKED FOR COMPLIANCE WITH CAPACITY REQUIREMENTS AND ELECTRICAL REQUIREMENTS. CONTRACTOR TO VERIFY THAT WEIGHTS, DIMENSIONS, AND DUCT CONNECTIONS ON SUBMITTED EQUIPMENT IS CONSISTENT WITH SCHEDULED EQUIPMENT PRIOR TO SUBMITTAL. CHANGES IN SCOPE BROUGHT ABOUT BY SUBMITTED EQUIPMENT THAT DOES NOT COMPLY WITH THE WEIGHTS, DIMENSIONS, OR CONNECTION LOCATIONS ON SCHEDULED EQUIPMENT SHALL BE THE SOLE RESPONSIBILITY OF THE CONTRACTOR.

LMnt ARCHITECTURE

Architecture
Landscape Architecture
Land Planning
Interior Design
Construction Management
LEED Consulting

9672 South 700 East Suite 203
Sandy Utah 84070
ph. 801.987.3911
www.lmntarch.com

TRIUMPH DESIGN BUILD

SEAL:

LICENSED PROFESSIONAL ENGINEER MARK MAKIN 8/17/20 STATE OF UTAH

project:
GoEngineer T.I.
739 E Fort Union Blvd
Midvale, UT 84047

project no: 20021

date: 2020.07.06

revisions:

Permit Set

sheet:
PLUMBING NOTES AND LEGENDS

P0.1

SHEET SIZE: 24" x 36"

ROYAL ENGINEERING

ELECTRICAL
1837 S. EAST BAY BLVD.
PHONE: 801.375.2228

MECHANICAL
PROVO, UTAH 84606
FAX: 801.375.2676

PLUMBING KEYED NOTES:

1. PROPOSED LOCATION FOR BUILDING PRV STATION AND MAIN SHUT-OFF. RELOCATE EXISTING AS REQUIRED. VERIFY PROPER FUNCTION OF EXISTING STATION AND SHUT-OFF. REPAIR TO LIKE NEW CONDITION.
2. FIELD VERIFY EXACT LOCATION OF 2" DOMESTIC WATER LINE. SEE WATER PIPING SCHEMATICS FOR METER AND PIPE SIZING. SEE CIVIL PLANS FOR CONTINUATION.
3. FIELD VERIFY SEWER LINE LOCATION WITH CIVIL UTILITIES AND SITE CONDITIONS.
4. APPROXIMATE LOCATION OF EXISTING GAS METER. COORDINATE LOCATION AND ALL REQUIREMENTS WITH GAS COMPANY.
5. WATER HEATER FLUE BY PLUMBING CONTRACTOR PER MANUFACTURER'S RECOMMENDATIONS. SEE PLUMBING DETAILS FOR REQUIREMENTS.
6. SEE SHEET P4.1 FOR MORE INFORMATION AND SIZING.

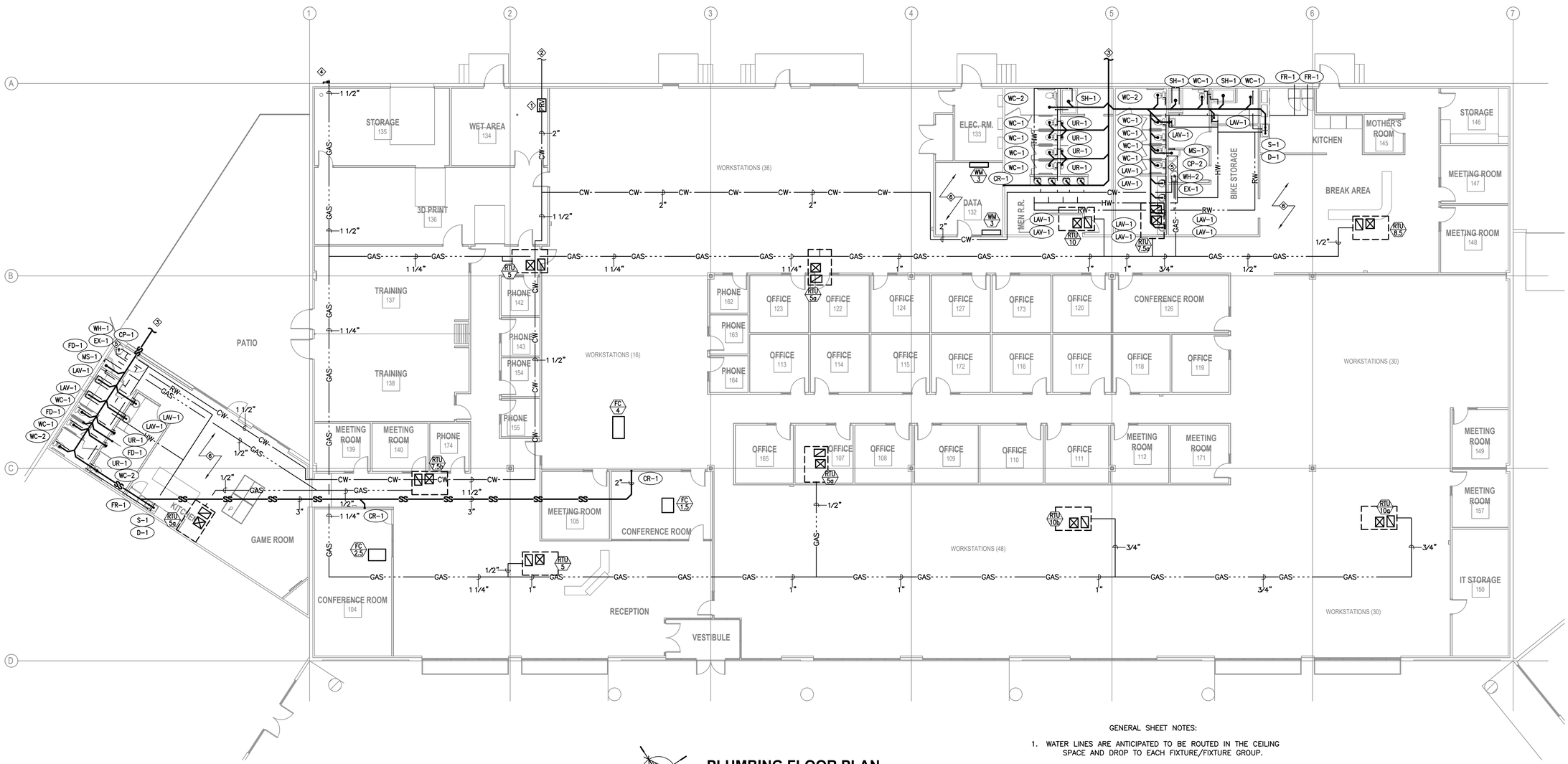

PLUMBING FLOOR PLAN

SCALE: 3/32" = 1'-0"

GENERAL SHEET NOTES:

1. WATER LINES ARE ANTICIPATED TO BE ROUTED IN THE CEILING SPACE AND DROP TO EACH FIXTURE/FIXTURE GROUP.
2. WATER LINES ARE SHOWN SCHEMATICALLY FOR CLARITY AND SHALL BE ROUTED WITHIN CONCEALED SPACES (I.E. WALLS, DROPS, CHASES, ETC.)

LMnt ARCHITECTURE

Architecture
Landscape Architecture
Land Planning
Interior Design
Construction Management
LEED Consulting

9672 South 700 East Suite 203
Sandy Utah 84070
ph. 801.987.3911
www.lmntarch.com

TRIUMPH DESIGN BUILD

SEAL:

project: GoEngineer T.I.
739 E Fort Union Blvd
Midvale, UT 84047

project no: 20021

date: 2020.07.06

revisions:

Permit Set

sheet: PLUMBING FLOOR PLAN

P1.1

SHEET SIZE: 24" x 36"

ROYAL ENGINEERING

ELECTRICAL
1837 S. EAST BAY BLVD.
PHONE: 801.375.2228

MECHANICAL
PROVO, UTAH 84606
FAX: 801.375.2676

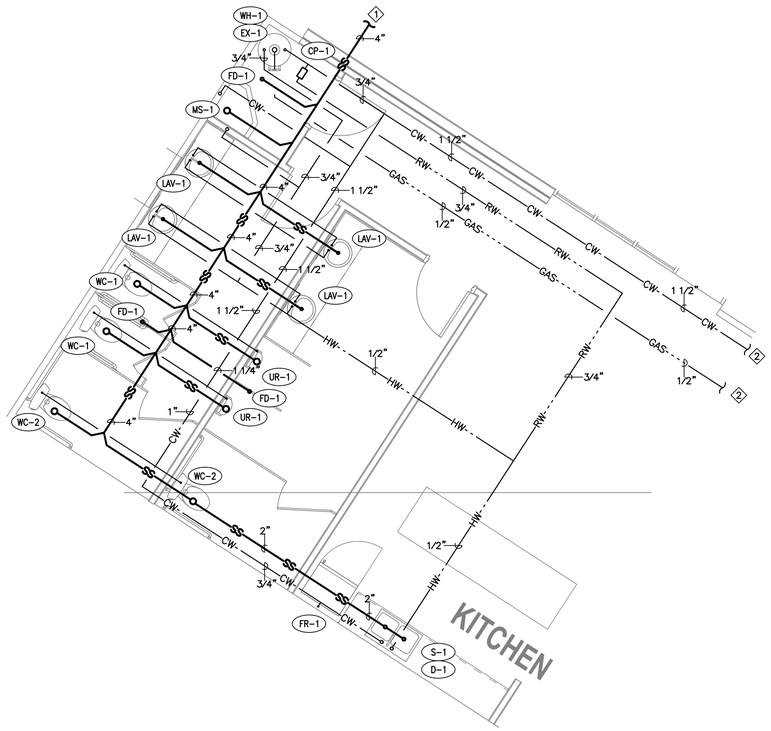

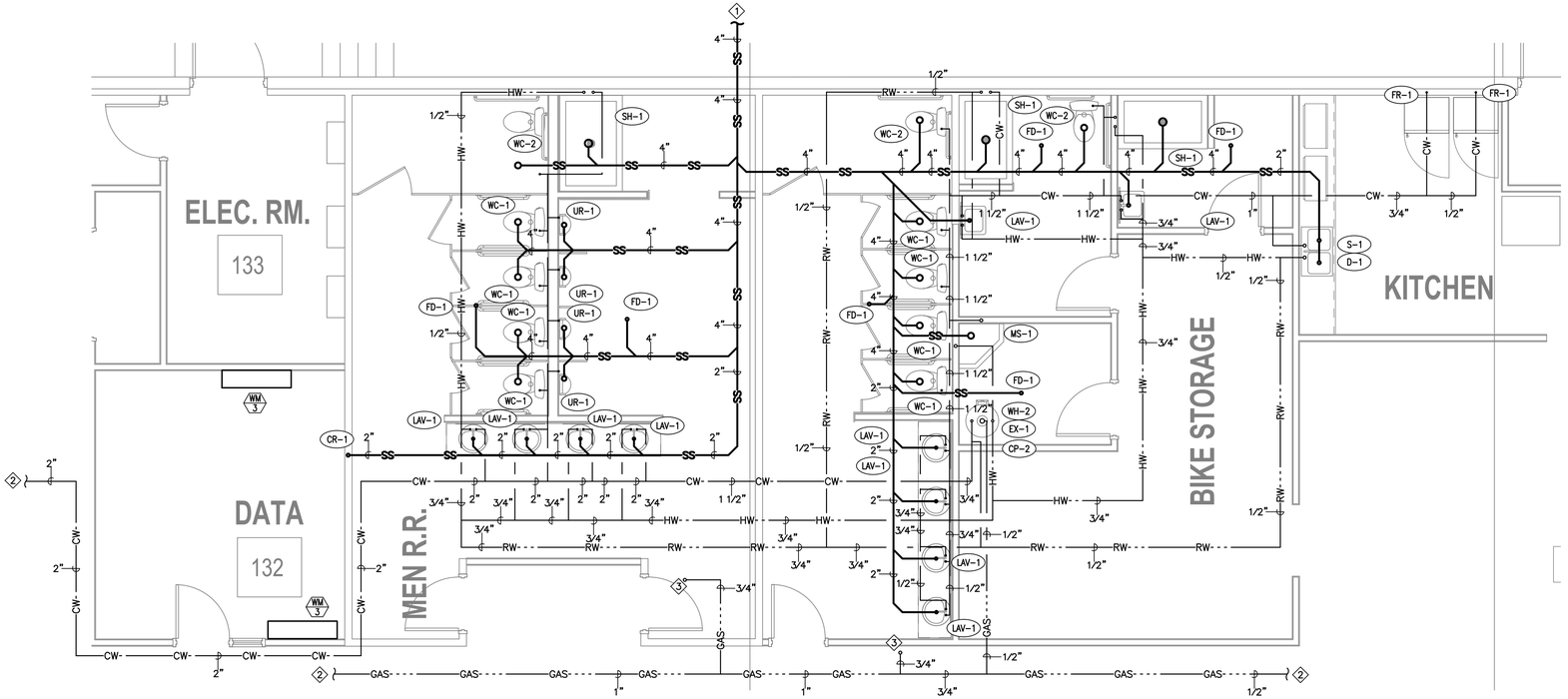

ENLARGED PLUMBING PLANS

SCALE: 1/4" = 1'-0"

PLUMBING KEYED NOTES:

1. FIELD VERIFY SEWER LINE LOCATION WITH CIVIL UTILITIES AND SITE CONDITIONS.
2. SEE SHEET P1.1 FOR CONTINUATION.
3. PROPOSED LOCATION OF GAS RISER TO ROOFTOP UNIT. SEE P1.1 AND GAS SCHEMATIC FOR MORE INFORMATION.

GENERAL SHEET NOTES:

1. WATER LINES ARE ANTICIPATED TO BE ROUTED IN THE CEILING SPACE AND DROP TO EACH FIXTURE/FIXTURE GROUP.
2. WATER LINES ARE SHOWN SCHEMATICALLY FOR CLARITY AND SHALL BE ROUTED WITHIN CONCEALED SPACES (I.E. WALLS, DROPS, CHASES, ETC.)

LMnt ARCHITECTURE

Architecture
Landscape Architecture
Land Planning
Interior Design
Construction Management
LEED Consulting

9672 South 700 East Suite 203
Sandy Utah 84070
ph. 801.987.3911
www.lmntarch.com

TRIUMPH DESIGN BUILD

SEAL:

LICENSED PROFESSIONAL ENGINEER MARC MAKIN 8/17/20 STATE OF UTAH

project:
GoEngineer T.I.
739 E Fort Union Blvd
Midvale, UT 84047

project no: 20021

date: 2020.07.06

revisions:

Permit Set

sheet:
ENLARGED PLUMBING PLANS

P4.1

SHEET SIZE: 24" x 36"

ROYAL ENGINEERING

ELECTRICAL
1837 S. EAST BAY BLVD.
PHONE: 801.375.2228

MECHANICAL
PROVO, UTAH 84606
FAX: 801.375.2676

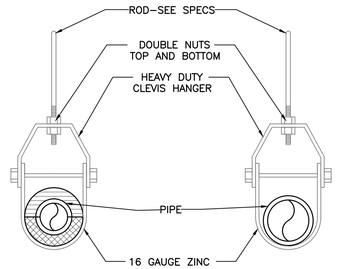

CLEVIS HANGER
SINGLE HORIZONTAL RUNS

CLEVIS HANGER
SINGLE HORIZONTAL RUNS WITH VAPOR BARRIER INSULATION

NOTE:
INSTALL 20 MIL THICK PVC ISOLATION TAPE BETWEEN PIPE AND HANGER FOR DISSIMILAR MATERIAL. WRAP TAPE AROUND PIPE (DUCT TAPE OR ELECTRICAL TAPE IS NOT ACCEPTABLE)

PIPE WITH CLEVIS HANGERS DETAIL

SCALE: NONE

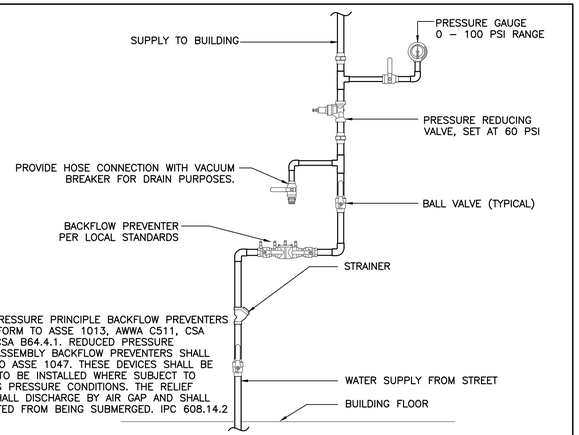

NOTE:
REDUCED PRESSURE PRINCIPLE BACKFLOW PREVENTERS SHALL CONFORM TO ASSE 1013, AWWA C511, CSA B64.4 OR CSA B64.4.1. REDUCED PRESSURE DETECTOR ASSEMBLY BACKFLOW PREVENTERS SHALL CONFORM TO ASSE 1047. THESE DEVICES SHALL BE PERMITTED TO BE INSTALLED WHERE SUBJECT TO CONTINUOUS PRESSURE CONDITIONS. THE RELIEF OPENING SHALL DISCHARGE BY AIR GAP AND SHALL BE PREVENTED FROM BEING SUBMERGED. IPC 608.14.2

WATER PRV STATION WITH BACKFLOW PREVENTER DETAIL

SCALE: NONE

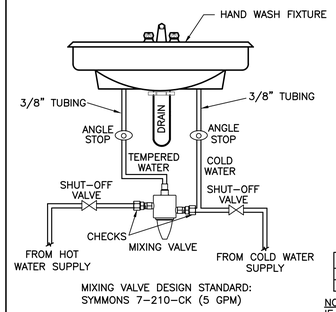

MIXING VALVE DESIGN STANDARD:
SYMMONS 7–210–CK (5 GPM)

SINGLE HAND WASH LOCATION

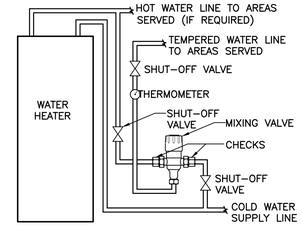

USED W/	GPM	MIXING VALVE	INLETS & OUTLETS
4–20GAL WH	14	SYMMONS 7–225–CK–F	1/2"
40GAL WH	14	SYMMONS 7–230–CK–F	3/4"

NOTE:
IF REQUIRED GPM EXCEEDS CAPABILITIES OF MIXING VALVES LISTED, PROVIDE MIXING VALVE WITH CAPABILITY NEEDED.

SERVING MULTIPLE FIXTURES

NOTES:
1. PROVIDE WITH SEPARATE CHECKS AND WALL MOUNTING BRACKET.
2. SHALL CONFORM TO ASSE 1070 – LIMIT THE TEMPERED WATER TEMPERATURE TO A MAXIMUM OF 110 deg F. IPC 2018, 607.1.2.
3. SET MIXING VALVE TEMPERATURE WHEN INSTALLATION IS COMPLETE.
4. FOLLOW ALL MANUFACTURER INSTALLATION AND OTHER INSTRUCTIONS.
5. APPROVED MANUFACTURERS: SYMMONS, POWERS, LEONARD, BRADLEY, WATTS, LAWLER.
6. INSTALL HANDY–SHIELD, AS MANUFACTURED BY PLUMBEREX SPECIALTY PRODUCTS, SAFETY COVERS ON ALL SUPPLY PIPING AND WASTE PIPING BENEATH HANDICAPPED LAVATORIES. SHIELDS SHALL MEET THE REQUIREMENTS OF UNIFORM FEDERAL ACCESSIBILITY STANDARDS 4.19.4 GSA AND ANSI DOCUMENT A117–1–1980.

WATER TEMPERING DETAILS

SCALE: NONE

NOTES:
1. EXACT ROUTING OF PIPING SHALL BE COORDINATED WITH STRUCTURE. VERIFY LOCATION OF STORM DRAIN CONNECTION LOCATION WITH OWNER REPRESENTATIVE AND CIVIL PLANS.
2. VERIFY LOCATION AND INSTALLATION ELEVATION OF ALL OVERFLOW DRAINS ON EXTERIOR OF BUILDING WITH ARCHITECTURAL PLANS AND OWNER REPRESENTATIVE.
3. PROVIDE AND INSTALL ALL REQUIRED TRAPS AND CLEANOUTS.
4. INSTALL OVERFLOW TERMINATION IN NORMALLY OBSERVED LOCATION.
5. INSTALL ROOF DRAINS WITH A MINIMUM OF 1/8" SLOPE PER FOOT. RESIZING OF DRAINS WILL BE REQUIRED IF 1/8" PER FOOT CANNOT BE OBTAINED. CONTACT ENGINEER OF RECORD IF RESIZING IS REQUIRED.
6. PROVIDE AND INSTALL 1" THICK INSULATION (OVER ANY SCHEDULED HEAT TAPE) ON THE THE PRIMARY ROOF DRAIN LINE FROM ROOF DRAIN LOCATION TO WHERE THE PIPE GOES VERTICAL AT THE TOP OF WALL OR SHAFT.

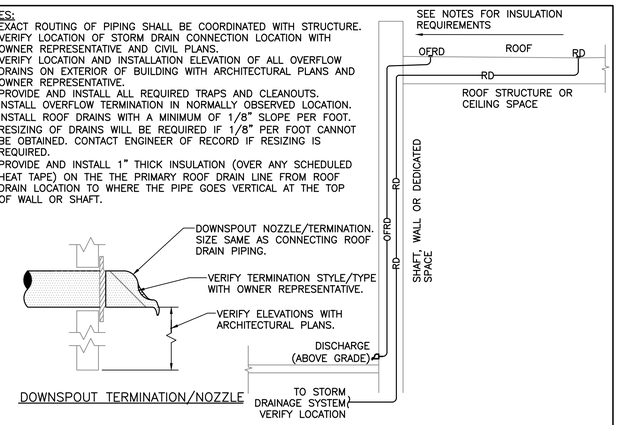

DOWNSPOUT TERMINATION/NOZZLE

TYPICAL ROOF DRAINAGE DIAGRAM WITH INSULATION (EXISTING)

SCALE: NONE

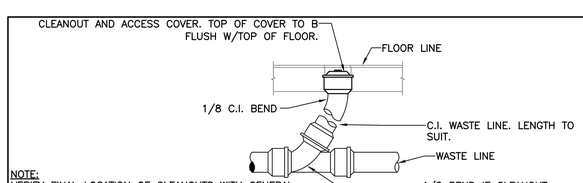

NOTE:
VERIFY FINAL LOCATION OF CLEANOUTS WITH GENERAL CONTRACTOR/OWNER REPRESENTATIVE

TYPICAL FLOOR CLEANOUT DETAIL

SCALE: NONE

MECHANICAL PIPING - MINIMUM INSULATION THICKNESS

SERVICE	TEMPERATURE RANGE (°F)	PIPE SIZE (IN.)					NOTES
		< 1	1 TO 1-1/2	2 TO 3-1/2	4 TO 7-1/2	8 & LARGER	
> 120 PSI STEAM	> 350	2.5	3	3	4	4	1, 2, 3, 5, 6
16 - 120 PSI STEAM	251 - 350	1.5	2.5	3	3	3	1, 2, 3, 5, 6
0 - 15 PSI STEAM	201 - 250	1.5	1.5	3	3	3	1, 2, 3, 5, 6
HOT WATER	141 - 200	1.5	1.5	2	2	2	1, 3, 5, 6
HOT WATER	105 - 140	1.5	1.5	2	2	2	1, 3, 5, 6
COOLING SYSTEMS	40 - 60	1.5	1.5	2	2	2	1, 3, 4, 5, 6
COOLING COIL CONDENSATE	32 - 65	.5	.5	.5	.5	.5	1, 5, 6

1. INSULATION CONDUCTIVITY NOT TO EXCEED 0.27 BTU PER INCH. WHERE INSULATION IS NOT EQUAL TO 0.27 BTU PER INCH THE INSULATION THICKNESS SHALL BE INCREASE AS DIRECTED IN THE INTERNATIONAL ENERGY CONSERVATION CODE.
2. STEAM SERVICE INCLUDES BOTH STEAM AND CONDENSATE RETURN PIPING.
3. INSULATION THICKNESS FOR RUNOUT PIPING BETWEEN THE CONTROL VALVE AND HVAC EQUIPMENT MAY BE REDUCED TO 1".
4. COOLING SYSTEMS INCLUDE CHILLED WATER, CHILLED BRINE, REFRIGERANT SUCTION, REFRIGERANT HOT GAS, AND CONDENSER WATER AND HEAT RECOVERY PIPING FALLING WITHIN THE LISTED TEMPERATURE RANGE. 5. INSULATION THICKNESS FOR PIPING LOCATED OUTDOORS OR EXPOSED TO OUTSIDE AIR SHALL BE INCREASED BY 1".
5. WHERE SCHEDULED THICKNESS DIFFERS FROM SPECIFICATIONS THE THICKER DIMENSION SHALL BE USED.

PLUMBING PIPING - MINIMUM INSULATION THICKNESS

SERVICE	TEMPERATURE RANGE (°F)	PIPE SIZE (IN.)					NOTES
		< 1	1 TO 1-1/2	2 TO 3-1/2	4 TO 7-1/2	8 & LARGER	
DOMESTIC COLD WATER	45 - 90	1	1	1	1	1	1, 2, 3
DOMESTIC HOT WATER	90+	1	1	1.5	1.5	1.5	1, 2, 3, 4
SERVICE HOT WATER	90+	1	1	1.5	1.5	1.5	1, 2, 3, 4
ROOF DRAIN PIPING	32+	1	1	1	1	1	1, 2, 3, 5

1. INSULATION CONDUCTIVITY NOT TO EXCEED 0.27 BTU PER INCH. WHERE INSULATION IS NOT EQUAL TO 0.27 BTU PER INCH THE INSULATION THICKNESS SHALL BE INCREASE AS DIRECTED IN THE INTERNATIONAL ENERGY CONSERVATION CODE.
2. INSULATION THICKNESS FOR PIPING LOCATED OUTDOORS OR EXPOSED TO OUTSIDE AIR SHALL BE INCREASED BY 1".
3. WHERE SCHEDULED THICKNESS DIFFERS FROM SPECIFICATIONS THE THICKER DIMENSION SHALL BE USED.
4. SERVICE AND DOMESTIC HOT WATER INCLUDES RECIRCULATION LOOP PIPING. 5. ROOF DRAIN PIPING INCLUDES DRAIN BOWELS AND OVERFLOW DRAIN PIPING.

PIPING INSULATION DETAIL

SCALE: NONE

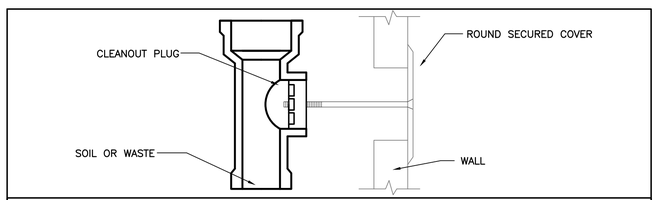

TYPICAL WALL CLEANOUT DETAIL

SCALE: NONE

LMnt ARCHITECTURE
Architecture
Landscape Architecture
Land Planning
Interior Design
Construction Management
LEED Consulting

9672 South 700 East Suite 203
Sandy Utah 84070
ph. 801.987.3911
www.lmntarch.com

TRIUMPH DESIGN BUILD

SEAL:

LICENSED PROFESSIONAL ENGINEER MARC MAKIN 8/17/20 STATE OF UTAH

project:
GoEngineer T.I.
739 E Fort Union Blvd
Midvale, UT 84047

project no: 20021

date: 2020.07.06

revisions:

Permit Set

sheet:
PLUMBING DETAILS

P5.1

SHEET SIZE: 24" x 36"

ROYAL ENGINEERING
ELECTRICAL
1837 S. EAST BAY BLVD.
PHONE: 801.375.2228
MECHANICAL
PROVO, UTAH 84606
FAX: 801.375.2676

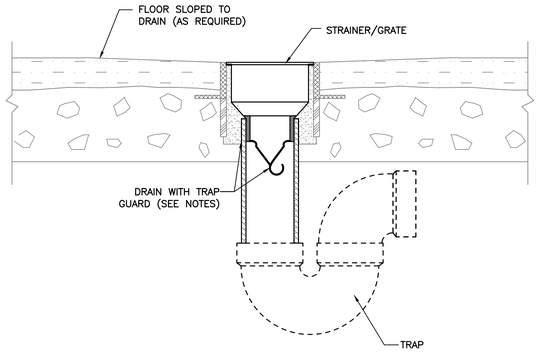

NOTES:
1. TRAP GUARD FLOOR DRAIN BY PROSET SYSTEMS INC.
2. FOLLOW ALL MANUFACTURER INSTALLATION AND OTHER INSTRUCTIONS.
3. APPROVED MANUFACTURES: PROSET, J.R. SMITH, RECTORSEAL.

FLOOR DRAIN WITH TRAP GUARD DRAIN SEAL (CONCRETE FLOOR)

SCALE: NONE

NOTE:
VENT TO OUTSIDE MAY BE ELIMINATED PROVIDED IF REGULATOR IS EQUIPPED WITH AND LABELED FOR USE WITH A VENT LIMITING DEVICE.

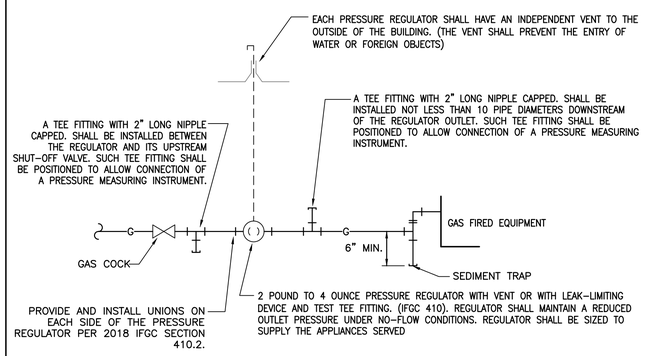

NOTE:
PRESSURE REGULATORS INSTALLED INSIDE BUILDING SHALL BE PROVIDED WITH ACCESS.

TYPICAL 2LB GAS CONNECTION DETAIL

SCALE: NONE

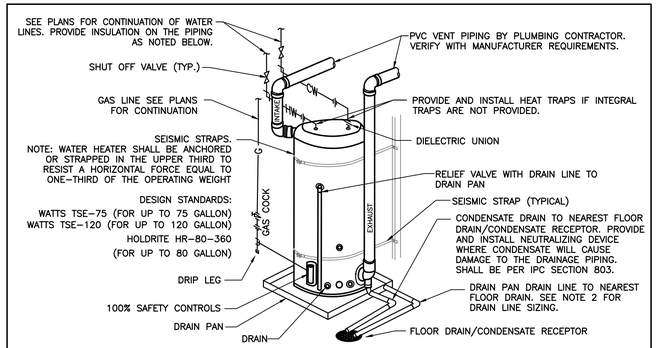

TABLE C403.11.3 PIPING INSULATION IECC 2018

FLUID OPERATING TEMPERATURE RANGE AND USAGE (F°)	INSULATION CONDUCTIVITY		NOMINAL PIPE SIZE OR TUBE SIZE (INCHES)				
	CONDUCTIVITY BTUxIN./(HxFT2xF°)	MEAN RATING TEMPERATURE, F°	<1	1 TO <1 ½	1 ½ TO < 4	4 TO < 8	> 8
>350	0.32 – 0.34	250	4.5	5.0	5.0	5.0	5.0
251 – 350	0.29 – 0.32	200	3.0	4.0	4.5	4.5	4.5
201 – 250	0.27 – 0.30	150	2.5	2.5	2.5	3.0	3.0
141 – 200	0.25 – 0.29	125	1.5	1.5	2.0	2.0	2.0
105 – 140	0.21 – 0.28	100	1.0	1.0	1.5	1.5	1.5
40–60	0.21 – 0.27	75	0.5	0.5	1.0	1.0	1.0
<40	0.20 – 0.26	50	0.5	1.0	1.0	1.0	1.5

NOTES:
1. PROVIDE AND INSTALL 2 SEISMIC STRAPS WITH TENSIONING BUCKLES ANCHORED TO STRUCTURE. INSTALL PER MANUFACTURERS REQUIREMENTS.
2. PROVIDE AND INSTALL PAN W/DRAIN WHERE REQUIRED, OR WHERE LEAK DAMAGE MAY OCCUR. DRAIN LINE SHALL BE 1 1/2" DIAMETER FOR PROJECTS LOCATED IN UTAH, 3/4" DIAMETER FOR OTHER PROJECT LOCATIONS.
3. PROVIDE HEAT TRAPS ON SUPPLY AND DISCHARGE PIPES.
4. THE FIRST 8 FEET OF PIPING IN NONCIRCULATING SYSTEMS SERVED BY EQUIPMENT WITHOUT INTEGRAL HEAT TRAPS SHALL BE INSULATED AS PER TABLE 403.11.3. IECC 2018.
5. FOR AUTOMATIC CIRCULATING HOT WATER SYSTEMS, PIPING SHALL BE INSULATED AS PER TABLE 403.11.3. IECC 2018.
6. FOR PROJECTS IN UTAH, PROVIDE LOW NOX WATER HEATER

TYPICAL DIRECT POWER VENT GAS WATER HEATER DETAIL

SCALE: NONE

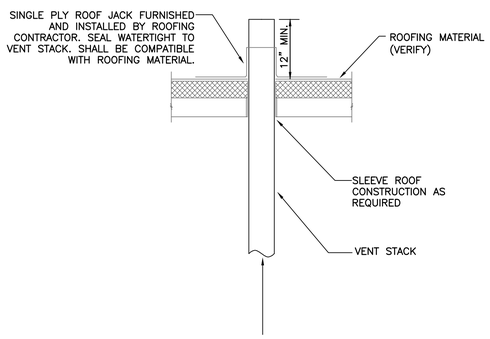

TYPICAL VENT THROUGH FLAT ROOF DETAIL

SCALE: NONE

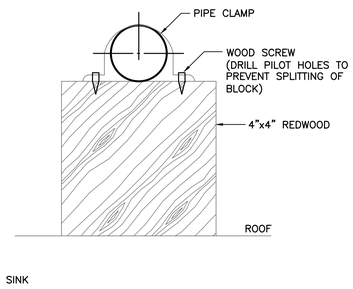

NOTE:
COVER SURFACES OF WOOD BLOCK THAT WILL COME INTO CONTACT WITH ROOF MEMBRANE WITH A COMPATIBLE MATERIAL.

ROOF MOUNTED GAS PIPING DETAIL

SCALE: NONE

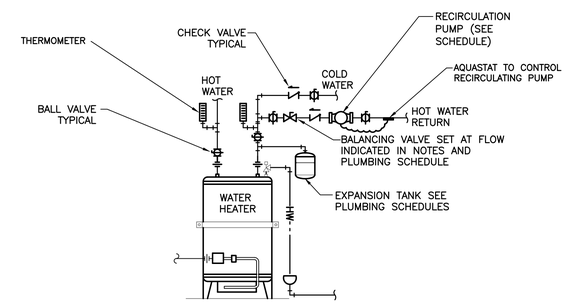

NOTES:
1. MAX ALLOWABLE VELOCITY RATES FOR HOT WATER RETURN LINE IS FROM 3 FPM TO 5 FPM
2. SEE WATER HEATER INSTALLATION DETAIL FOR ADDITIONAL INFORMATION.

RECIRCULATION PUMP WITH WATER HEATER DETAIL

SCALE: NONE

LMnt ARCHITECTURE
Architecture
Landscape Architecture
Land Planning
Interior Design
Construction Management
LEED Consulting
9672 South 700 East Suite 203
Sandy Utah 84070
ph. 801.987.3911
www.lmntarch.com

TRIUMPH DESIGN BUILD

SEAL:

REGISTERED PROFESSIONAL ENGINEER MARC MAKIN 8/17/20 STATE OF UTAH

project: GoEngineer T.I.
739 E Fort Union Blvd
Midvale, UT 84047

project no: 20021

date: 2020.07.06

revisions:

Permit Set

sheet:

PLUMBING DETAILS

P5.2

SHEET SIZE: 24" x 36"

ROYAL ENGINEERING
ELECTRICAL
1837 S. EAST BAY BLVD.
PHONE: 801.375.2228
MECHANICAL
PROVO, UTAH 84606
FAX: 801.375.2676

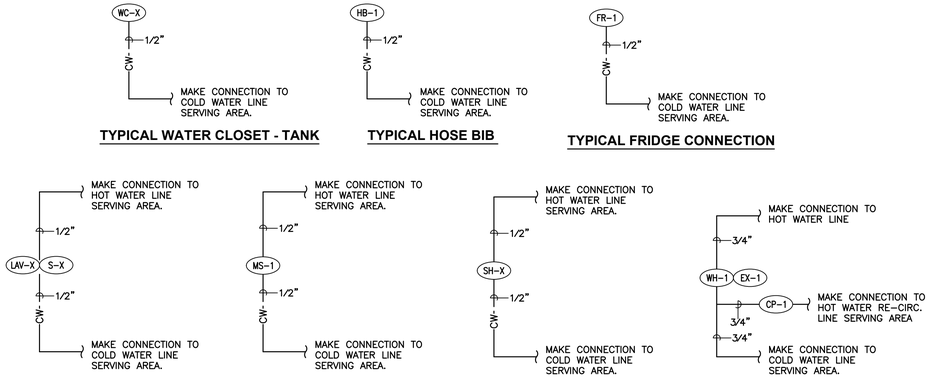

WATER PIPING SCHEMATICS

SCALE: NONE

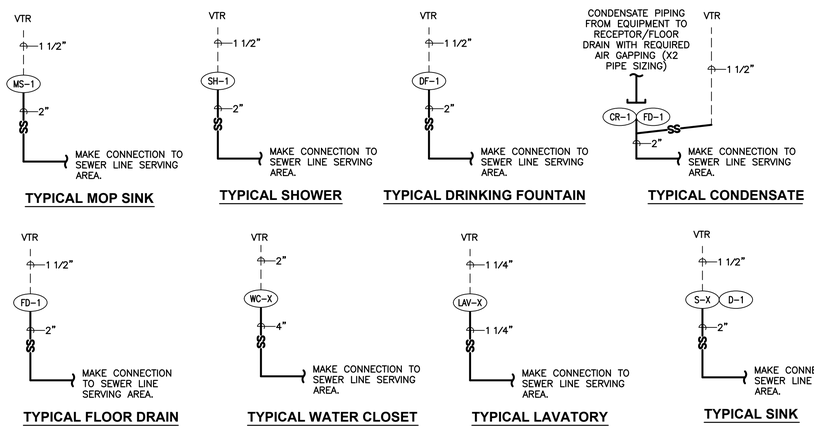

WASTE AND VENT PIPING SCHEMATICS

SCALE: NONE

GENERAL NOTE: VENT & CONDENSATE SHALL BE 12"-24" BELOW DECK/ROOF ABOVE TO AVOID CONDENSATION ICING

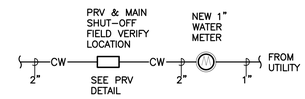

WATER METER

BUILDING WATER PIPING CALCULATIONS

DESIGN CONDITIONS

CITY	– MIDVALE, UTAH
DEVELOPED PIPE LENGTH	– 250 FEET (VERIFY)
WATER PRESSURE	– 60 psi MIN. (VERIFY)
ANTICIPATED FIXTURE UNITS	– 156 fu

MINIMUM COMPOUND METER SIZE: 1-1/2"
MINIMUM MAIN DISTRIBUTION LINE SIZE: 2"
156 FU = APPROXIMATELY 56 GPM

GAS PIPING CALCULATIONS

DESIGN CONDITIONS

CITY	– MIDVALE, UTAH
LONGEST GAS PIPE	– 450 FEET (VERIFY)
GAS PRESSURE	– 2 POUND (VERIFY)
DERATION FACTOR	– 890

EQUIPMENT

RTU-5a (x3)	388	CFH	(345,000 BTU/HR)
RTU-7.5a	203	CFH	(180,000 BTU/HR)
RTU-7.5b	203	CFH	(180,000 BTU/HR)
RTU-10a	252	CFH	(224,000 BTU/HR)
RTU-10b	304	CFH	(270,000 BTU/HR)
RTU-5 (x2)	248	CFH	(220,000 BTU/HR)
RTU-8.5	203	CFH	(180,000 BTU/HR)
RTU-10	252	CFH	(224,000 BTU/HR)
WH-1	34	CFH	(30,000 BTU/HR)
WH-2	43	CFH	(38,000 BTU/HR)
TOTAL	2,130	CFH	(1,891,000 BTU/HR)

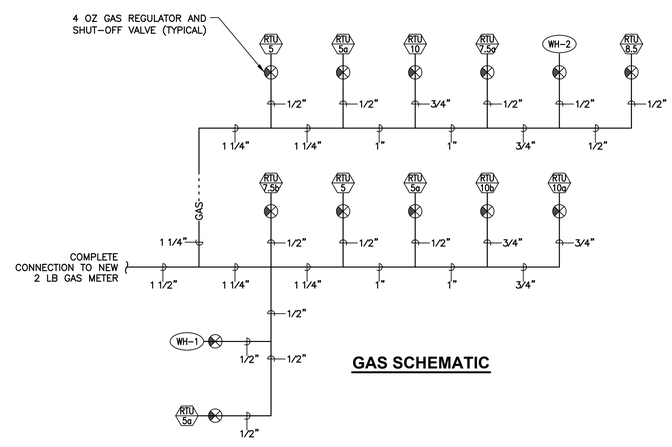

GAS SCHEMATIC

PLUMBING FIXTURE SCHEDULE

MARK	FIXTURE	PIPE SIZE TRAP	WASTE	VENT	C.W.	H.W.	REMARKS
CR-1	CONDENSATE RECEPTOR	2"	2"	1 1/2"	—	—	CONDENSATE RECEPTOR WITH HUB FUNNEL FOR CONDENSATE FROM HIGH EFFICIENCY EQUIPMENT.
DW-1	DISH WASHER	—	—	—	—	1/2"	CONNECT DRAIN TO SINK DRAIN PIPE OR DISPOSAL DISHWASHER DRAIN TUBE IF INSTALLED. PROVIDE AND INSTALL HAMMER ARRESTOR WITH COMPRESSION FITTINGS AT DISHWASHER SUPPLY VALVE.
D-1	DISPOSAL	—	—	—	—	—	3/4 HP, 120 VOLT, 8 AMP AVE. LOAD, WASTE DISPOSAL WITH DISHWASHER DRAIN CONNECTION. CONNECT TO SINK AND PROVIDE ALL MOUNTING HARDWARE. CONTROL BY ELECTRICAL CONTRACTOR.
EX-1	EXPANSION TANK	—	—	—	3/4"	—	WATTS PLT-5 (OR EQUAL), DRAWN STEEL POTABLE WATER EXPANSION TANK WITH DIAPHRAGM SEPARATING THE AIR CHAMBER FROM THE WATER CHAMBER. DIAPHRAGM MATERIALS SHALL BE FDA APPROVED.
FD-1	FLOOR DRAIN	2"	2"	1 1/2"	—	—	FLOOR DRAIN WITH STRAINER. PROVIDE AND INSTALL TRAP GUARD. SEE ARCHITECTURAL DRAWINGS FOR FLOOR TYPE.
FR-1	FRIDGE WATER CONNECTION	—	—	—	1/2"	—	RECESSED ICE MAKER/WATER OUTLET BOX WITH FACE PLATE AND SUPPLY VALVE.
HB-1	HOSE BIB, INTERIOR	—	—	—	1/2"	—	WALL MOUNTED HOSE BIB WITH ANTI-SIPHON VACUUM BREAKER AND KEY OPERATED VALVE.
HB-2	HOSE BIB, EXTERIOR-VANDAL RESISTANT	—	—	—	1/2"	—	FREEZELESS WALL MOUNTED HOSE BIB WITH ANTI-SIPHON VACUUM BREAKER AND KEY OPERATED VALVE.
LAV-1	LAVATORY-COUNTER MOUNTED-ADA COMPLIANT	1 1/4"	1 1/4"	1 1/4"	1/2"	1/2"	KOHLER, UNDER COUNTER, SINGLE LEVER MOEN 8413 FAUCET AND SAFETY COVERS FOR ALL EXPOSED PIPING. SEE ARCHITECTURAL DRAWINGS.
MS-1	MOP SINK	2"	2"	1 1/2"	1/2"	1/2"	AMERICAN STANDARD-FLORWELL, ENAMELED CAST IRON FLOOR MOUNTED MOP SINK, VINYL RIM GUARD AND AMERICAN STANDARD 8344.112 WALL MOUNTED FAUCET WITH THREADED HOSE CONNECTION.
S-1	SINK-COUNTER MOUNTED-DOUBLE BOWL	1 1/2"	1 1/2"	1 1/2"	1/2"	1/2"	ELKAY-CELEBRITY, DOUBLE BOWL, STAINLESS STEEL SINK, COUNTERTOP MOUNTED WITH LEDGEBACK, MOEN FAUCET (W/4" BLADE HANDLES) AND SAFETY COVERS FOR ALL EXPOSED PIPING.
SH-1	SHOWER-ADA COMPLIANT	2"	2"	1 1/2"	1/2"	1/2"	SHOWER WITH SINGLE LEVER/HANDLE, ANTI-SCALD VALVE, SLIDE BAR AND HAND HELD SHOWER HEAD WITH 60" MIN. LONG HOSE. SEE ARCHITECTURAL DRAWINGS FOR MOUNTING LOCATIONS, HEIGHTS AND CLEARANCES
UR-1	URINAL-WALL HUNG-ADA COMPLIANT	2"	2"	1 1/2"	3/4"	—	ADA COMPLIANT AMERICAN STANDARD-WASHBROOK, VITREOUS CHINA URINAL WITH CARRIER AND EXPOSED SLOAN ROYAL 186 FLUSH VALVE. SEE ARCHITECTURAL DRAWINGS FOR HEIGHTS AND CLEARANCES.
WB-1	WASHING MACHINE CONNECTION	2"	2"	1 1/2"	1/2"	1/2"	RECESSED WASHING MACHINE OUTLET BOX WITH SUPPLY VALVES, WASTE DRAIN, FACE PLATE AND WATER HAMMER ARRESTORS.
WC-1	WATER CLOSET-FLOOR MOUNT-TANK	INT.	4"	2"	1/2"	—	AMERICAN STANDARD-CHAMPION-4, VITREOUS CHINA ELONGATED TANK TOILET, OPEN SEAT W/O COVER.
WC-2	WATER CLOSET-FLOOR MOUNT-TANK-ADA COMPLIANT	INT.	4"	2"	1/2"	—	AMERICAN STANDARD-CHAMPION-4, "RIGHT HEIGHT" VITREOUS CHINA ELONGATED TANK TOILET, OPEN SEAT W/O COVER. SEE ARCHITECTURAL DRAWINGS FOR HEIGHTS AND CLEARANCES.
WH-1	29 GALLON WATER HEATER	—	—	—	3/4"	3/4"	29 GALLON NATURAL GAS WATER HEATER W/ DRAIN PAN & DRAIN. 30 g.p.h RECOVERY @ 90° RISE. 30,000 BTU INPUT. DESIGN GUIDE: RHEEM XG29T06EN30U1.
WH-2	50 GALLON WATER HEATER	—	—	—	3/4"	3/4"	50 GALLON NATURAL GAS WATER HEATER W/ DRAIN PAN & DRAIN. 38 g.p.h RECOVERY @ 90° RISE. 38,000 BTU INPUT. DESIGN GUIDE: RHEEM XG50T06EN38U1.

NOTES:
1. VERIFY ALL MANUFACTURERS, FINISHES, AND OPTIONS WITH OWNER BEFORE ORDERING ANY PLUMBING FIXTURES.
2. MINIMUM UNDERGROUND SANITARY SEWER PIPING SIZE SHALL BE 2 INCHES.

LMnt ARCHITECTURE
Architecture
Landscape Architecture
Land Planning
Interior Design
Construction Management
LEED Consulting

9672 South 700 East Suite 203
Sandy Utah 84070
ph. 801.987.3911
www.lmntarch.com

TRIUMPH DESIGN BUILD

SEAL:

LICENSED PROFESSIONAL ENGINEER MARK A. MAKIN 8/17/20 STATE OF UTAH

project: GoEngineer T.I.
739 E Fort Union Blvd
Midvale, UT 84047

project no: 20021

date: 2020.07.06

revisions:

Permit Set

sheet: PLUMBING SCHEDULES AND SCHEMATICS

P6.1

SHEET SIZE: 24" x 36"

ROYAL ENGINEERING
ELECTRICAL
1837 S. EAST BAY BLVD.
PHONE: 801.375.2228
MECHANICAL
PROVO, UTAH 84606
FAX: 801.375.2676

SECTION 22 PLUMBING – GENERAL PROVISIONS
Not all specification items are used in every project.

PART 1 – GENERAL

– **Scope:**

Furnish all labor, materials, equipment, appliances and necessary incidentals for the complete installation of all plumbing shown on the drawings and as specified.

A. Work specified in this section

1. Sanitary soil, waste and vent systems.
2. Domestic hot and cold water systems.
3. Domestic water heaters.
4. Furnish and set all sleeves for pipes passing through walls and floors.
5. Pipe covering, insulation and wrapping.
6. Excavation and backfill.
7. Rough–in and final connections to air conditioning equipment of condensate drains.
8. All plumbing fixtures, water heaters, valves, and other miscellaneous items or equipment required for a complete installation.
9. Provide collars at fire rated penetrations.

B. Provisions of this section apply to all work specified in all sections under Division 22. All items indicated on site, Architectural, Mechanical, or Plumbing drawings are to be provided complete from point of connection to finished fixture in conformance with all governing authority requirements. Nothing in these drawings or specifications shall be construed to permit work in violation of governing codes.

C. In addition, work in Division 22 is governed by the provisions of the Bidding Requirements, Contract Forms, General Conditions and all sections under Division 1, General Requirements.

1. Examination of Premises: Visit the site, verify all measurements and job conditions, and pay all costs necessary to perform the work. Coordinate division of fee responsibilities with the General Contractor.
2. The Plumbing Contractor shall be licensed and hold a current contracting license as a Plumbing Contractor that has been valid for a minimum of two years in the State where the project is located.
3. The Plumbing Contractor shall have a minimum of five years experience installing commercial plumbing systems similar to those described in these specifications and provide a list of previous projects, including name of project and contact person names and phone numbers if required by the General Contractor.
4. The Plumbing Contractor shall be able to bond work he is bidding to perform and shall provide a written statement from the bonding agency proposed to be used for this project as a separate document in addition to the plumbing bid submitted if required by the General Contractor. The bonding agency shall be one having a Best's insurance rating of A or A+.

D. Contractor is responsible for results caused by deviating from the plans.

– **Regulations, Permits, Fees, Charges, Inspections:**

A. Regulations: Comply with all applicable codes, rules and regulations. All materials and work must comply with local construction, mechanical, plumbing, electrical and fire codes. As a minimum, comply with the following: IMC, IPC, IECC, NEC, NFPA codes and all City codes.

B. In addition to the requirements of all governing codes, ordinances and agencies, conform to the requirements of the following codes and standards:

1. 2018 International Plumbing Code
2. 2018 International Building Code
3. 2018 International Mechanical Code
4. 2018 International Energy Conservation Code.

C. Current codes adopted by the respective jurisdiction will supercede the listed codes.

D. Fees and Permits: Pay all connection, installation, use, development, etc., fees and/or charges. Obtain and pay for all required permits and licenses. Coordinate division of fee responsibilities with the General Contractor.

E. Inspections: All work must be inspected and approved by local authorities. Prior to final approval, furnish the Architect with certificates of inspections and approvals by the local authorities in accordance with Division 1.

1. Preheat and interpass temperature shall be determined by temperature indicating crayons, contact pyrometers or other equally suitable means.

F. Postweld Heat Treatment: Postweld heat treatment for pressure components shall be as specified in Table 131 of ANSI B31.1.

– **Drawings and Specifications:**

A. Refer to Division 1 for information on submittals and shop drawings.

B. If a conflict exists between the drawings and specifications, promptly notify the Architect and Engineer.

– **Record Drawings:** Provide record drawings for all work under sections in Division 22. See Division 1 for detailed requirements covering preparation of record drawings.

– **Work and Materials:** Unless otherwise specified, all materials must be new and of the quality specified. The workmanship shall be of a quality that is acceptable to the Architect and is equal to the standards of the trades. Contractor must staff the project with sufficient skilled workmen, including a fully qualified construction Superintendent, to complete the work in the time allotted. The Superintendent must be qualified to supervise all of the work in his work category.

– **Approvals of Materials and Equipment:** Refer to Division 1 for description of material and equipment for prior approvals and substitutions. Must be received by Engineer 10 days prior to due date/bid opening.

– **Maintenance Manual:**

A. Prior to completion of the project, compile a complete equipment and maintenance manual for all equipment supplied under sections of Division 22 as described in Division 1.

B. Manuals shall be bound in a three–ring binder. A preliminary submittal of the manual shall be made to the Architect 90 days after receiving approved submittals. Final submittal of the manual shall be made four weeks prior to substantial completion of the project.

– **Equipment Purchases:** Arrange for purchase and delivery of all materials and equipment within 15 days after approval of submittals. Coordinate with General Contractor.

– **Cooperative Work:**

A. Correct without charge any work requiring alteration due to lack of proper supervision or failure to make proper provision in time. Correct without charge any damage to adjacent work caused by the alteration. See Division 1 for additional requirements.

B. Cooperative Work Includes:

1. General supervision and responsibility for proper location, rough–in and size of work related to Division 22 but provided under other divisions of these specifications.

2. Installation of sleeves, inserts and anchors bolts for work under sections in Division 22.

3. Electrical work as specified herein. Refer to Division 26 for requirements.

– **Construction Facilities:**

A. General: Under this division of the specifications execute all work in a manner to provide safe and lawful ingress and egress to the Owner's establishment and such facilities shall be kept clear of materials or equipment as directed by the Architect. Refer to Division 1 for additional requirements.

B. Furnish and maintain from the beginning to the completion of all work all lawful and necessary guards, railings, fences, canopies, lights, and warning signs. Take all necessary precautions required by city and state laws to avoid injury or damage to any and all persons and property.

– **Guarantee:** Guarantee all material, equipment, and workmanship for all sections under Division 22 in writing to be free from defects of material and workmanship for one year from date of final acceptance as outlined in Division 1. Replace without charge any material or equipment proving defective during this period. The guarantee shall include performance of the equipment under all conditions of load, installing any additional items of control and/or protective devices as required and the replacing of any refrigerant lost.

– **Electrical Work:**

A. Electrical wiring, including power wiring and control wiring (except as otherwise specified under Automatic Temperature Controls), all raceways, wiring, outlet and junction boxes, and labor for installation of the wiring and equipment shall be included in Electrical Division 26 of the specifications.

B. All starters in motor control centers are to be furnished and installed under the Electrical Division of the specifications.

C. Before ordering any motors and equipment. Verify the available voltage and phase for all motors with the Electrical Contractor.

D. Submit a complete list of all motors prior to final closeout of job indicating the locations, horsepower, voltage, phase specified in Table 132 of ANSI B.1.

E. All field wiring and equipment must conform to the applicable sections of the Electrical specifications, Division 26.

– **Welding Codes and Standards:** All welding and other criteria covered by this specification shall be in accordance with the following code:

A. ASME Boiler and Pressure Vessel Code

B. Section IX ANSI Code for Power Piping: B31.1

C. AWS D10.12.D10.12M Welded joints for gas piping.

– **Product Handling**

A. Protection: Take all precautions necessary to protect the materials of this section before, during, and after installation.

B. Replacements: In the event of damage, immediately repair all damaged and defective work to the approval of the Engineer, at not additional cost to the Owner.

– **Submittals:**

A. Manufacturer's Literature: Within 35 days after award of contract and before any of the materials of this section are delivered to the job site submit seven complete brochures of all materials and equipment, per Division 1 of the specifications.

B. Other Submittals:

1. Shop Drawings.
2. Sterilization Test Report
3. Test Data.

C. Sets in bound booklet form of written operating and maintenance instructions and brochures for equipment specified in this section. Fully instruct Owners Operating Personnel.

D. Record Drawings: Keep an accurate dimensioned record of As–Built locations and elevations, as referred to approved base datum, of buried concealed.

E. Operation and Maintenance Instructions: Deliver to Architect tow complete lines, manhole, cleanouts, valves, plugged tees, capped ends, and of work which is installed different from shown in the plans.

– **Miscellaneous:**

A. Examination of the site: Exercise care in examining the site and coordinate all work indicated on the drawings with existing conditions. Report to Architect in writing conditions that will prevent proper provisions of this work. Verify depth and location of all service lines with servicing companies having jurisdiction before excavating, by submission of the bid. The contractor warrants that he has familiarized himself with the existing conditions and will perform all work as required for hookup and as required by the contract documents at no additional cost.

B. Permits and fees: Arrange and pay for all permits, inspections and fee required by all governing agencies.

C. Service connections: Make all necessary arrangements with applicable utility company for connection to existing service lines. Pay all fees associated with work including meters, hookup charge and utility assessments fees.

D. Drawings: Coordinate all space requirements with other trades, drawings indicate desired location and arrangement of piping, equipment, and other items and are to be followed as closely as possible.

PART 2 – PRODUCTS

– **General**

A. Pipe sleeves and wrapping: Provide polished chromium plated and brass set screw flanges where plumbing piping pass through walls, floors, ceilings, and partitions in finished portions of building including flanges on pipes at fixtures. All sleeves in concrete and exterior walls shall be 20 GA. galvanized iron one inch O.D. larger than the pipe, caulked if below grade in a moisture proof manner. All pipes penetrating through fire walls and floors shall be properly safed with Dow Corning 3=6548 silicone RTV foam or equal. Install per manufacturer's directions.

B. Pipe Identification:

1. Piping identification per ANSI and OSHA Standards: Each individual pipeline shall be marked for quick and easy identification as to contents and character of material carried in the pipes by set on SNA or STR Marker.
2. Markers shall be installed and spaced at not more than 20 foot intervals and so located that markers shall be visible where piping is exposed.
3. Color scheme shall be as follows:

	Background or Color Band	Identification Marker
Domestic Hot Water –	Yellow	Black on Yellow
Domestic Hot Water Return –	Yellow	Black on Yellow
Domestic Cold Water –	Green	White on Green
Sanitary Sewer –	Green	White on Green
Sanitary Vent –	Green	White on Green
Natural Gas –	Yellow	Black on Yellow
Storm Water –	Green	White on Green
Freon –	Black	White on Black

C. One marker shall installed at each side of valves, special fittings and at branch take–offs. In furred spaces install one band 2 feet above floor and 19 inches below ceiling line.

D. Materials: Materials when not otherwise definitely specified shall conform to the applicable ASTM, ASME, AGA and ASA standards.

E. All gas fired equipment shall include a label indicating that the appliance has been adjusted, modified or re–calibrated for the altitude where in the project is to be located (Green Sticker). The appliance shall also include a compliance statement indicating that the appliance has been adjusted, modified or re–calibrated for the proper operation at the altitude of the project and shall be listed capable for use with natural gas or propane gas if propane is listed on the drawings.

– **Pipe and Fitting Schedule:**

Pipe and Fittings:

A. No pipe of foreign manufacturer will be acceptable on projects required to meet the Buy American Act.

B. All piping, fittings, flanges, etc. shall be free from defects and shall comply with the appropriate ASTM specifications.

C. Black steel pipe: ASTM A53 ERW Grade B, standard weight (schedule 40) or extra strong (schedule 80) as specified.

D. Copper tubing: ASTM B88, Type L or K as specified.

E. PVC pipe and fittings: ASTM D1785 Class 150 with ASTM D 2564 solvent cement joints unless otherwise specified. Schedule 40. PVC plastic pipe fittings: ASTM F 628, schedule 40.

F. PEX–AL–HPDE distribution system: ASTM F 1986 tubing and metal–insert type with copper or stainless–steel crimp ring and matching PEX–AL–HDPE tube dimensions. Manifold: Multiple–outlet, plastic or corrosion–resistand–metal assembly complying with ASTM F 877: with plastic or corrosion–resistant–metal valve for each outlet.

G. PP piping and fittings: ASTM F 2389; CSA B137.11

H. Acrylonitrile Butadiene Styrene (ABS) plastic pipe: ASTM D 2661, schedule 40, ASTM F 628 schedule 40. ABS plastic pipe fittings: ASTM F 409, accessible and replaceable, solvent cement and threaded types, drain pattern.

I. Cast iron soil pipe and fittings: ASTM A74

J. Welded black steel fittings: ASTM A234 grade B, 150–Pound for standard weight piping, 300–Pound for extra strong piping, or of weight or schedule of matching piping.

K. Threaded malleable iron fittings: ANSI B16.3, 150–Pound for standard weight piping, 300–Pound for extra strong piping, or weight or schedule of matching piping either black or galvanized to match piping.

L. Welded flanges: ASTM A181 grade B, 150–Pound for standard weight piping, 300–Pound for extra strong piping or of equal weight of connected equipment.

M. Copper fittings: Wrought copper, ANSI specification B16.22.

N. Ball valves domestic water: Bronze, fullport, class 150, threaded. NIBCO T–585 or equal

O. Partition stop valves: T&S B–0415, Loose key type with wall flange.

P. Balancing cocks 2 inches and smaller shall be by Armstrong, NIBCO, Taco or Watts.

Q. Solder: Joints in copper piping above grade shall be stay safe 50 solder or 95–5 solder shall be silfos or silverflow for all refrigerant piping joints.

R. Condensate drains shall be Type L hard copper tubing with wrought–copper fittings (can't be used for condensing gas–fired applications) or PVC pipe and fittings where allowed. A P–trap shall be provided at drains.

S. Gas piping in the building and not buried shall be standard weight black steel pipe and shall have welded fittings. Gas piping buried shall be polyethylene pipe with continuous 18 gauge tracing wire with schedule 40 black steel epoxy coated transition risers and/or transition fittings per ASTM D2513 and installed in accordance with Questar Supply Company (or local utility company) regulations. Paint all exterior exposed gas piping.

T. Chilled water and heating system lines shall be standard weight black steel. Pipe 2–1/2 inch and smaller shall either have welded fittings, mechanical grooved fittings or malleable iron screwed fittings.

U. Domestic hot water, hot water return, and cold water piping shall be Type L or K hard tempered copper pipe with wrought–copper fittings using 95–5 solder. Pex tube piping may be used in lieu of copper on sizes 2–inches and smaller. Where piping is exposed outside partitions, use Type L or K hard copper tubing and wrought copper fittings.

V. Domestic hot water and cold water piping buried below grade shall be Type K soft tempered (annealed) copper without fittings or joints and covered with IMCOA IMCOSHIELD unicellular insulation. PEX tube piping may be used in lieu of copper on sizes 2–inches and smaller.

W. All soil, waste, vent, roof drain and roof drain overflow piping below ground shall be ABS or PVC plastic pipe, rated for domestic waste and vent, with ABS or PVC plastic socket type drain, waste vent pattern fittings, solvent cemented joints. Install ABS drainage pipe and fittings according to ASTM D661. Install PVC drainage pipe and fittings according to ASTM F891.

X. All soil, waste, vent, roof drain and overflow piping above ground shall be standard weight cast iron with no hub coupling or approved material meeting the standards set forth in IPC tables 702.1, 702.2, and 702.3 & 702.4..

Y. Kitchen waste and vent serving fixtures capable of discharging or receiving waste liquids with temperatures in excess of 120 degrees F. shall be piped using No–Hub standard wight cast iron pipe for a minimum of 20 feet before changing to ABS pipe.

– **Roof Flashing:**

A. Sanitary Vent Flashings: SEMCO 1100–3 or 1100–5, with one–piece lead flashing and counterflashing sleeve.

– **Pipe Sleeves:**

A. At concrete walls for floors, adjust–to–crete, paramount, hole–out Sperzel Cretesleeve floor sleeves shall extend to top of concrete curbs for piping rising through floors. Wall sleeves shall be flush with finished surface, sleeves shall be sized to allow ½ inch clearance around pipe insulation. Insulation and covering shall be continuous through wall and floor sleeves.

– **Cleanouts:**

A. Full size cleanouts shall be installed at the base of each soil waste stack. All other cleanouts shall be installed where shown on the drawings and where required by State, Local or National Plumbing Codes.

B. All cleanouts shall be installed in locations easily accessible for rodding. Cleanouts in wall shall be JR Smith 4402, in floors JR Smith 4023/ Cleanouts shall be JR Smith, Wade or Josam.

– **Pipe Insulation:**

A. All domestic hot water, hot water recirculation and cold water piping shall be covered with Owens Corning ASJ–25 fiberglass pipe insulation with vapor seal jacket. Insulation thickness shall be ½ inch for cold water and 1 inch for hot water.

B. Insulate all piping under Lavatories accessible to physically handicapped with hot water supply and "P" trap prefabricated insulation, Handi Lav Guard.

– **Pipe Hangers:**

A. Hangers shall be supplied with factory installed isolation and DI–Chromate finish.

B. Pipe 2 inches and smaller: Grinnel F69. Pipe 2–1/2 inch and larger: Grinnel F65. Concrete Inserts: Grinnel 281 and 282. Riser clamps for copper piping: Grinnel 261P, plastic coated. Riser clamps for other piping: Grinnel 261,

C. Hanger rods shall conform to the following: Pipe size 2 inch and smaller: ⅜ inch rods. Pipe size 2–1/2 inch and 3 inch: ½ inch rods. Pipe size 3 inch and larger: ⅝ inch rods.

– **Plumbing Fixtures:**

A. Fixtures shall be the water saving typer with maximum usage of 1.6 gallons per flush for water closets, 2.5 gallons per minute for showers, 3.0 gallons per minute for service sinks, 1.0 gallon per flush for urinals, 0.5 gallons per minute for public lavatories, 2.2 gallons per minute for private lavatories and 2.2 gallons per minute for sinks.

B. All fixtures shall be caulked to the floor or wall with water resistant white butyl rubber caulking compound. Trim for shall match in design. Supply faucets shall have renewable seats and barrels.

PLUMBING EQUIPMENT	MANUFACTURER
Floor Drains & Floor Sinks:	Zurn, JR Smith, Wade, Josam, Ancon, Mifab, Watts, or Equal
Trench Drains:	Zurn, JR Smith, Watts, Josam or approved equal
Roof Drains and Overflow:	Zurn, JR Smith, Wade, Watts, Josam, Ancon, Mifab
Cleanouts:	Zurn, JR Smith, Wade, Josam, Mikro, Mifab, Watts, or Equal
Valves:	Watts, Milwaukee, Crane, Kennedy, Stockham, Misson, Grinnell, Keystone, American Valve, or NIBCO
Shower Valves:	Powers, Symmons, Delta, Leonard, Moen, Bradley, Zurn, Acorn
Pipe Hangers & Supports:	Grinnell, Elcen, Kin–Line, Unistrut, F&S, B–Line, Michigan, Wesanco, or Piping Technology & Products
Insulation:	CertainTeed, Manville, Pittsburgh, Armstrong, LSP Products, or Owens–Corning
Plumbing Faucets:	American Standard, Chicago, Delta, Moen, Kohler, Symmons, T&S, Gerber, Zurn
Plumbing Fixtures:	American Standard, Kohler, Toto, Gerber, Watts, Zurn, Sterling, Lasco
Plumbing Supply Stops:	Eastman, Crane, Kohler, Wolverine, McGuire, Brasscraft, EBC, Zurn, Chicago
Water Closets:	American Standard, Gerber, Kohler, Toto, Sterling
Flush Valves:	Sloan. Delany, Zurn, Moen, American Standard, Gerber
Toilet Seats:	American Standard, Bemis, Kohler, Sperzel, Olsonite, Beneke, Gerber or Church
Pressure Reducing Valves:	Watts series 223, Zurn or Wilkins
Hose Bibs:	Chicago, Acorn, Wolverine, Woodford, McGuire, Watts, Mifab, Josam, Zurn, Sioux Chief, Prier, Smith
Electric Water Coolers: Stainless Steel Sinks:	Elkay, Sunroc, Halsey Taylor, Haws Corporation, Westinghouse, Murdock Elkay, Just, Moen, or approved equal
Disposals:	Insinkerator, Evergrind, Kenmore, or appoved equal
Gas Pressure Regulator:	Fisher, Equimeter, Pietro Fiorentini
Thermostatic Tempered Water Valves:	Symmons, Powers, Leonard, Bradley, Watts, Caleffi, Lawler, Acorn
P–Traps:	American Standard, Kohler, McGuire, Brasscraft, Dearborn, EBC
Shock Absorbers:	Zurn, Smith, Wade, Josam, PPP, Sioux Chief, Watts, Mifab
Sewer Ejectors:	Peabody–Barnes, Weil, Hydromatic, Gorman–Rupp, Swaby, Weinman, Zoeller
Gas Water Heaters:	AO Smith, Bradford White, Rheem, State, Rinnai, Ruud, National, PVI, or approved equal
Electric Water Heaters:	Lochnivar, AO Smith, Rheem, State, Ruud, PVI, National, EEMAX, Chronomite & Vaughn, or approved equal

LMnt ARCHITECTURE

Architecture
Landscape Architecture
Land Planning
Interior Design
Construction Management
LEED Consulting

9672 South 700 East Suite 203
Sandy Utah 84070
ph. 801.987.3911
www.lmntarch.com

TRIUMPH DESIGN BUILD

SEAL:

REGISTERED PROFESSIONAL ENGINEER
MARC A. MAKIN
8/17/20
STATE OF UTAH

project:
GoEngineer T.I.
739 E Fort Union Blvd
Midvale, UT 84047

project no: 20021

date: 2020.07.06

revisions:

Permit Set

sheet:
PLUMBING SPECIFICATIONS

P7.1

SHEET SIZE: 24" x 36"

ROYAL ENGINEERING

ELECTRICAL
1837 S. EAST BAY BLVD.
PHONE: 801.375.2228

MECHANICAL
PROVO, UTAH 84606
FAX: 801.375.2676

– **Gas Water Heater:**

A. A gas water heater of the size and capacity shown on the drawings shall be furnished and installed. Water heater shall be an approved manufacturer (see approved manufacturer list in Plumbing Fixtures 2.10).

B. The tank shall be constructed in accordance with ASME code and stamped with the appropriate symbol for 150 PSI. Tank interior shall be glass lined. Tank cabinet to have a baked enamel finish with bonderized undercoat.

C. Heater shall have a 3 year warranty.

D. The water heater shall be insulated with a high density fiberglass insulation.

E. ASME pressure and temperature relief valve, temperature limiting device. A low water protection device, magnesium anode rod and drain valve shall be factory installed.

– **Recirculating Hot Water Pump:**

A. A recirculating hot water pump of the size shown on the drawings shall be furnished and installed. The pumps shall be Bell & Gosset, Taco, Chicago, Pacific, Paco, Weinman, Amtrol, Grundfos, Weil, or Armstrong of all bronze construction with mechanical seal and 1850 RPM drip–proof motor with thermal overload protection. Circulators shall be substantially supported with a full size pipe leg to the floor or by a cradle hanger from the ceiling.

– **Domestic Expansion Tank:**

A. ASME 150 PSI steel pressurized expansion tanks for portable use with ASME stamp of the size and capacity shown on the drawings shall be furnished and installed. Tank shall be complete with internal heavy duty Butyl Rubber Diaphragm, rigid Polypropylene liner on water side of tank, complying with FDA. Air charging fitting, tank drain, pressure gauge, air vent and connections as shown on the drawings. Supports for expansion tanks shall be furnished and installed by the plumber. Tanks shall be Watts, Amtrol, Taco, Armstrong or Zurn.

PART 3 – EXECUTION

– **Surface Conditions:**

A. Inspection: All plumbing shall be installed in accordance with the requirements of all governing authorities, The original design, and referenced standards.

B. Discrepancies:
1. In the event of discrepancy, immediately notify the Architect.
2. Do not proceed with installation in areas of discrepancy until all such discrepancies have been fully resolved. Interferences between installed work of various trades due to lack of coordination shall be resolved by the Architect whose decision is final. Relocate or offset any work as required to accommodate work of other trades at no extra cost to the Owner when so directed by the Architect.

– **Verification of Dimensions:**

A. Scaled and figured dimensions are approximate only. Before proceeding with work, carefully check and verify dimensions at site, and be responsible for properly fitting equipment and materials together and to the structure in spaces provided.

B. Drawings are essentially diagrammatic and many offsets, bends, special fittings and exact locations are not indicated. Carefully study drawings and premises in order to determine best methods, exact locations, routes, building obstructions, and install apparatus and equipment in available locations. Install apparatus and equipment in manner and in locations to avoid obstructions, preserve headroom, and keep openings and passageways clear.

– **Locations and Space Requirements:**

A. Contractor shall fully inform himself regarding peculiarities and limitation of spaces available for installation of work under this division. Drawings indicate desired location and arrangement of piping, equipment and other items and are to be followed as closely as possible. Work specified and not clearly defined by drawings shall be installed and arranged in a satisfactory manner. In any case and at any time a change in location required by obstacles or the installation of other trades not shown on the plumbing plans shall be made by contractor without additional charge provided the change is ordered before work is installed and no extra materials are required.

B. Verify all spaces, dimensions for all fixtures, equipment, or owner–furnished equipment and equipment furnished under other sections.

C. Obtain all necessary rough in data and dimensions for all fixtures, equipment, or owner–furnished equipment and equipment furnished under other sections.

D. Maintain ample headroom clearances and accessibility. Maintain ceiling heights.

E. Constantly check work of other trades to prevent interference with this installation.

– **Cutting and Patching:** Cut work and patch per Division 1 as necessary to properly install the new work. As the work progresses, coordinate necessary openings, holes, chases, etc., in their correct location. If the required openings, holes and chases are not in their correct locations, make the necessary corrections at no cost to the Owner. Avoid excessive cutting and do not cut structural members without the consent of the Architect. Patching by General Contractor at Mechanical, Plumbing or Fire Protection Contractor's expense. Include as a part of the work under this contract all structural framing required by penetrations through the roof and necessary steel to support ducts and pipes between structural steel unless shown on the structural drawings.

– **Closing–in of Unfinished Work:** Cover no work until inspected, tested and approved. Where work is covered before inspection and test,uncover it, and when inspected, tested and approved, restore all work to original proper condition.

– **Excavation and Backfill:**

A. Perform all necessary excavation, shoring and backfilling required for the proper laying of all pipes and conduits inside the building and premises, and outside as may be necessary. Conform to Division 2 requirements. Remove all excess excavated materials from the site or dispose of on site as directed by General Contractor.

B. Excavate all trenches open cut, keep trench banks as nearly vertical as practicable, and sheet and brace trenches where required for stability and safety. Excavate trenches true to line and make bottoms not less than 18" wide but no wider than necessary to provide ample work room. Grade trench bottoms accurately to provide uniform bearing and support for each section of pipe on undisturbed soil along its entire length. Dig "bell" holes after the trench bottom has been graded. Machine grade only to the top line of the pipes, doing the balance by hand. Do not cut any trench near or under footings without first consulting the Architect. Comply with OSHA requirements.

C. Provide backfilling and compaction in accordance with requirement of Division 2 and under the direction of the Architect and the Owner's testing firm to the required density. Make the first 2 feet of fill in 6" layers, each thoroughly compacted as directed, and free from rocks, large clods of earth, leaves, branches, and debris. Compact the rest of the backfill to prevent settlement as directed, using in the backfill no rocks larger than 4" in diameter, and using no rocks at all in the top 12".

– **Accessibility:**

A. Install valves, dampers, thermometers, gauges, traps, cleanouts, control devices or other specialties requiring reading, adjustment, inspection, repairs, removal or replacement conveniently and accessibly throughout the finished building. Where any of these devices are shown on the contract drawings to be installed above any inaccessible ceiling, the Mechanical Contractor shall furnish access doors or panels as required.

B. All access doors or panels in walls and ceilings required for access to control devices, traps, valves and similar devices are to be furnished and installed as part of the work under this section. Provide type as specified under Division 8.

C. Provide ducts which pierce a fire separation with fire dampers of same fire rating as the separation.

D. Refer to drawings and "Finish Schedule" for type of wall and ceiling in each area and for rated construction.

E. Coordinate work of various sections to locate valves, traps, and dampers with others to avoid unnecessary duplication of access doors.

– **Roof Flashings:** Flash and counterflash all piping, conduits and ductwork penetrating roofing membrane with flashing per roofing manufacturer's recommendations. Refer to architectural drawings for detailing of duct and pipe penetrations through roof.

– **Equipment Rough–in:**

A. Rough in all equipment and fixtures as designated on the drawings and in the specifications. The drawings indicate only the approximate location of rough–ins. The exact rough–in locations must be determined from large–scale certified drawings. The Contractor shall obtain all certified rough–in information before progressing with any work for rough–in final connections.

B. Be responsible for providing all outlets and services of proper size at the required locations.

C. Minor changes in the contract drawings shall be anticipated and provided for under this division of the specifications.

D. Rough–in only (unless otherwise designated on the drawings) shall include the following:

1. Plumbing: Provide all services designated and required, including waste and water. Valve and cap all stub–outs for water and gas. Cap all waste and vent outlets.

2. Mechanical: Provide all services as indicated and required, including all ductwork, piping and valves. Valve and cap all piping stub–outs. Cap all ductwork stub–outs in a manner suitable for future extension.

– **Owner–Furnished and Other Equipment:**

A. Rough–in only for all Owner–furnished equipment (see Division 1) and all equipment furnished under other sections of the specifications, except as otherwise specified and/or noted on the drawings.

B. Provide all services designated, valve and cap all piping, cap all waste piping and ductwork and leave in a clean and orderly manner.

C. Rough–in requirements shall be as outlined in the preceding paragraph titled "Equipment Rough–In."

– **Equipment Final Connections:**

A. Provide all piping final connections for all equipment under Division 22 as required herein specified and indicated on the drawings.

B. Plumbing: Provide final plumbing connections complete with shutoff valves, risers, traps, vacuum breakers and indirect wastes for all equipment furnished and installed under other sections of these specifications, except as otherwise designated. Included under the Plumbing section of the specifications are the final connections to the following:

1. Miscellaneous equipment specified to be furnished and installed under other divisions of the specifications.

2. Cold water make–up connections to air conditioning equipment.

3. Kitchen equipment, furnished under other sections of the specifications.

– **Sterilization:**

A. Sterilize each unit that will have water in it, the water supply piping and distribution system with liquid chloride or hydrochloride before acceptance of operation in accordance with AWWA C601, "Standard for Disinfection Water Mains" work shall be done by contractor and unless otherwise required by Public Authorities having Jurisdiction, shall conform to the following:

B Materials
1. Liquid Chlorine: U.S. Army Specification 4–1. 2. Hydrochloride: Liquid shall conform to FED. Spec. O–C–11RA (INT. 4).

C. Method: Amount of chlorine shall provide a dosage of 50 PPM minimum. Introduce chlorinating materials into lines and distribution system in approved manner after a contact period of 24 hours during which period chlorine residual shall be maintained at 5 PPM minimum, flush out systems with clean water until residual content is not greater than 0.2 PPM. Flush entire system open and close valves in lines being sterilized several times during contact period.

D. Sterilization report shall be turned into the Engineer for review prior to requesting a substantial completion inspection.

– **Machinery Accessories:**

A. Application: Do not install any equipment in an application not recommended by the manufacturer.

B. Installation: Align, level and adjust all equipment for proper operation. Install so connecting and disconnecting of piping and accessories can readily be done and so all parts are readily accessible for inspection, service and repair. Install equipment in accordance with manufacturer's recommendations.

– **Pipe and Equipment Supports:**

A. Where supports, foundations, stands, suspended platforms for machinery, tanks, or other equipment are indicated or specified, perform the following:

1. Locate support members to avoid equipment strains and interference with piping connections, tube pulling or other maintenance operations.

2. Where saddles are required, use cast iron or welded steel saddles with curvature to fit the tank shell.

3. Mount power–driven equipment on common base with driver.

B. Concrete Inserts: Furnish and install all concrete inserts required for all materials and equipment specified and/or shown on the drawings for Division 22.

C. Concrete Foundations: Work under this section includes coordination of construction of all concrete foundations indicated or required for equipment specified herein or in other sections under Division 22. Materials and workmanship shall be described under Division 3.

D. Grout under all equipment after leveling, filling completely the space between machinery bed plate and foundation surface as specified in Division 3. Finish exposed surface of grout for a neat appearance.

E. Floor Stands: Where equipment is mounted standard or on legs, construct of structural steel or steel pipe and fittings, cross–brace and fasten with flanges or plates bolted to floor.

F. Ceiling or Wall Supports: Use suspended platform, strap hangers, bracket or shelf, whichever is most suitable for equipment and location. Construct of structural steel members, steel plates, rods or pipe as required. Cross–brace and fasten to building structure or inserts in an approved manner.

G. Steel Work: Neatly fabricate and erect steel work with burrs and welding spatter ground off. Paint after fabrication with a rust–inhibitive primer.

– **Hangers and Supports:**

A. Hold horizontal pipe runs firmly in place using approved steel and iron hangers, supports, and/or pipe rest unless otherwise indicated. Suspend hanger rods from concrete inserts or from approved brackets, clamps or clips. Hang pipes individually or in groups if supporting structure is adequate to support weight of piping and fluid. Except for buried piping, hang or support pipe runs so that they may expand or contract freely without strain to pipe or equipment.

1. Horizontal steel piping: Provide hangers or supports every 10 ft. except every 8 ft. for piping 1–1/4 inch and smaller.

2. Horizontal copper tubing: For 2 inch diameter and over, provide hangers every 10 feet, for 1–1/2 inch diameter and smaller every 6 feet.

3. Horizontal cast–iron no–hub piping: Provide hangers or supports at each side of no–hub fittings. Provide anti–separation bracing at each 90 degree change in direction.

4. Horizontal cast–iron hub and spigot piping: Provide hangers or supports at each hub.

5. Vertical piping: Support at floor with iron pipe clamps.

– **Test:**

A. Perform test to Architect's satisfaction. Make test in presence of Owner's Rep and at the time suitable to him if requested. Furnish necessary labor and equipment and bear cost for testing. Cost of replacing and/or repairing damage resulting therefor shall be borne by this contractor, should the contractor refuse or neglect to make test necessary to satisfy the Architect that requirement of specifications and drawings are met, such tests may be made by an independent testing company and the contractor charged for all expenses.

B. Hydrostatic test: Make by completely filling piping system with water and eliminating accumulations of air so that leakage, no matter how small, will be apparent on testing gauge immediately. Maintain pressure until pipe under test has been examined, but in no case less than 24 hours. Test system at the following pressure:

SYSTEM	TEST PRESSURE
Domestic Cold Water	150 PSIG
Domestic Hot Water	150 PSIG

C. Sanitary soil, waste, bent systems test: Before installation of fixtures, cap end of system and fill lines with water to 10 feet above the section being tested. (including bents) and allow to stand for at least fifteen (15) minutes before inspection starts. Make test in sections if necessary or convenient. However, include interconnections between new sections and previously tested section in the new test.

D. Roof drainage system: Test as specified for sanitary system.

E. Gas systems: Test with compressed air at 10 PSI for six hours or longer as directed to provide a tight seal without leaks. Use pressure recorder to record pressure of all lines for duration of test.

F. Repair all leaks and retest as required.

– **Cleanouts:**

A. Provide cleanouts where indicated and required. Unless otherwise indicated, cleanouts shall be accessible with extensions to grade to outside of buildings, or to floors above as indicated or required. Do not locate cleanouts in public lobbies and public corridors unless approved by Architect.

B. Membranes: Where waterproofing membrane occurs under floor, bring membrane to cleanout without puncturing and permanently anchor to integral anchoring flange with heavy cast–iron clamping collar and rustproof bolts.

C. Covers: Set cleanout covers with all finished wall, floor or grade. In all cases securely anchor by means of integral lugs and bolts. Where surfacing material such as resilient coverings is specified, ascertain thickness being used and set cleanout top so finished floor is smooth.

D. Use Acorn 3500 thread compound.

– **Pipe Installation:**

A. Make pipe runs straight and true. Springing or forcing piping into place is not permitted. Install in manner to prevent any undue strain on equipment. Make joints smooth and unobstructed inside and out, and ream pipe ends thoroughly to remove burrs. Conceal piping in finished portions of the building except as otherwise directed or indicated. Cap or plug ends and openings in pipe and fittings immediately to exclude dirt until equipment is installed or final connections are made.

B. Install piping to clear beams unless sleeving is indicated. Constantly check work of other trades to prevent interference with this installation. Obtain approval from Architect if coring or cutting of concrete work is necessary due to failure to install required sleeves prior to the time of concrete pour. Cost of coring and cutting work shall be borne by the subcontractor.

C. Exposed plated or enameled pipe: Make connections to equipment with special care. Show not tool marks or threads.

D. Dielectric Unions: Make connections between two dissimilar metal pipes with dielectric unions.

E. Unions: Provide a union on one side of each shutoff valve. At both sides of automatic valves. At equipment connections and elsewhere indicated or required, unless flanges are indicated.

F. Floor, wall ceiling plates: Provide where pipes pierce finished surfaces.

G. Noise: Install soil, waste, and water piping in a manner that prevents any unusual noise from flow of water under normal conditions.

H. Shutoff Valves: Provide where indicated and required for adequate control of system and for isolation of fixture groups and equipment.

I. Buried Pipe: Install with minimum 36 inches coverage unless otherwise indicated. Lay piping accurately to grade where invert elevations are indicated. When required provide thrust blocks per manufacturer's recommendations.

J. Equipment and Materials: Install per manufacturer's recommendations.

K. Accessibility: Install work readily accessible for normal operation, reading of instruments, adjustments, service, inspections and repair. Provide access panels where indicated and required.

L. Pipe Joints: Make screwed joints with a minimum amount of compound applied to the male thread only. All joints shall be made per code requirements and manufacturer's recommendations.

M. Provide pipe isolation at all hangers for non–insulated materials.

N. Piping Rough–in for Fixtures: Support or secure to building construction of firmly anchored waste piping so that pipes cannot be displaced. Do not secure to walls. Use of makeshift devices, such as rope, wire, tape, etc. is prohibited.

O. Horizontal drainage piping shall be installed in uniform alignment at uniform slopes. The minimum slope for horizontal pipe 4" or larger in diameter may have a slot of not less than 1% (⅛ inch per foot). The minimum slope of horizontal pipe less that 4"; may have a slope of not less than 2% (¼ inch per foot).

– **Cleanup:**

A. In addition to cleanup specified under Division 1, thoroughly clean all parts of the equipment. Where exposed parts are to be painted, thoroughly clean off any splattered construction materials and remove all oil and grease spots. Wipe the surface carefully and scrape out all cracks and corners.

B. Thoroughly flush and clean out all water circulating systems. Remove, clean and replace all strainer elements.

C. During the progress of the work, keep the premises clean and free of debris.

– **Painting:**

A. Except as otherwise specified or indicated in the architectural drawings and/or specifications, paint all exposed unfinished metal with one coat of rust–inhibiting primer.

B. Finished painting is specified under Division 9.

– **Connections to Services:** Provide all connections to sanitary sewer lines, storm sewer, gas lines, water lines, electrical services furnished under other contracts, except as otherwise specifically designated. Provide all necessary tees, taps and connections required to properly connect to all mains. Verify all required City requirements before making any piping connections to sanitary sewer, storm sewer, water or gas piping and conform to them during installation.

– **Welding:**

A. Procedures:

1. All procedures and welders must be qualified in accordance with the requirements of Section IX, ASME Boiler and Pressure Vessel Code and ANSI code for power piping B31.1. Procedure qualification test records and acceptance shall be submitted with the welding procedure prior to the start of fabrication.

2. Architect's inspector or authorized representative will review performance qualification records of individual welders.

B. Welding Processes: The following welding processes are permitted, provided that the procedure is qualified in accordance with Section IX, ASME Boiler and Pressure Vessel Code.

1. Manual shielded metal–arc.

2. Gas tungsten–arc.

3. Other welding processes may be used providing they are qualified in accordance with Section IX, ASME Boiler and Pressure Vessel Code.

C. Restrictions: Weld bevel preparations shall be provided on all welding fittings and shall be machined or ground to remove all discoloration if flame or arc cut.

D. Welding Filler Material:

1. A filler material control procedure shall be submitted to Owner for review and acceptance prior to performing any welding.

2. All shielded metal–arc welding shall be performed using low–hydrogen type electrodes such as E 7018.

E. Preheat and Interpass Temperature:

F. Preheat for pressure components shall be as specified in Table 132 of ANSI B.1.

LMnt ARCHITECTURE

Architecture
Landscape Architecture
Land Planning
Interior Design
Construction Management
LEED Consulting

9672 South 700 East Suite 203
Sandy Utah 84070
ph. 801.987.3911
www.lmntarch.com

TRIUMPH DESIGN BUILD

SEAL:

LICENSED PROFESSIONAL ENGINEER MARC MAKIN 8/17/20 STATE OF UTAH

project: GoEngineer T.I.
739 E Fort Union Blvd
Midvale, UT 84047

project no: 20021

date: 2020.07.06

revisions:

Permit Set

sheet: PLUMBING SPECIFICATIONS

P7.2

SHEET SIZE: 24" x 36"

ROYAL ENGINEERING

ELECTRICAL
1837 S. EAST BAY BLVD.
PHONE: 801.375.2228

MECHANICAL
PROVO, UTAH 84606
FAX: 801.375.2676

COM*check* Software Version 4.1.1.0

Mechanical Compliance Certificate

Project Information

Energy Code:	2018 IECC
Project Title:	Go Engineering
Location:	Midvale, Utah
Climate Zone:	5b
Project Type:	New Construction

Construction Site:

Owner/Agent:

Designer/Contractor:
Royal Engineering
Provo, UT

Additional Efficiency Package(s)

Reduced interior lighting power. Requirements are implicitly enforced within interior lighting allowance calculations.

Mechanical Systems List

Quantity	System Type & Description
2	RTU-5 (Single Zone): Heating: 1 each - Duct Furnace, Gas, Capacity = 88 kBtu/h Proposed Efficiency = 80.00% Ec, Required Efficiency: 80.00 % Ec Cooling: 1 each - Single Package DX Unit, Capacity = 60 kBtu/h, Air-Cooled Condenser, Air Economizer Proposed Efficiency = 14.00 SEER, Required Efficiency: 14.00 SEER Fan System: None
1	RTU-8.5 (Single Zone): Heating: 1 each - Duct Furnace, Gas, Capacity = 148 kBtu/h Proposed Efficiency = 80.00% Ec, Required Efficiency: 80.00 % Ec Cooling: 1 each - Single Package DX Unit, Capacity = 102 kBtu/h, Air-Cooled Condenser, Air Economizer Proposed Efficiency = 11.00 EER, Required Efficiency: 11.00 EER + 12.6 IEER Fan System: None
1	RTU-10 (Single Zone): Heating: 1 each - Duct Furnace, Gas, Capacity = 184 kBtu/h Proposed Efficiency = 80.00% Ec, Required Efficiency: 80.00 % Ec Cooling: 1 each - Single Package DX Unit, Capacity = 120 kBtu/h, Air-Cooled Condenser, Air Economizer Proposed Efficiency = 11.00 EER, Required Efficiency: 11.00 EER + 12.6 IEER Fan System: None
3	RTU-5a (Single Zone): Heating: 1 each - Duct Furnace, Gas, Capacity = 93 kBtu/h Proposed Efficiency = 80.00% Ec, Required Efficiency: 80.00 % Ec Cooling: 1 each - Single Package DX Unit, Capacity = 60 kBtu/h, Air-Cooled Condenser, Air Economizer Proposed Efficiency = 14.00 SEER, Required Efficiency: 14.00 SEER Fan System: None
1	RTU-7.5a (Single Zone): Heating: 1 each - Duct Furnace, Gas, Capacity = 144 kBtu/h Proposed Efficiency = 80.00% Ec, Required Efficiency: 80.00 % Ec Cooling: 1 each - Single Package DX Unit, Capacity = 90 kBtu/h, Air-Cooled Condenser, Air Economizer Proposed Efficiency = 11.00 EER, Required Efficiency: 11.00 EER + 12.6 IEER Fan System: None
1	RTU-7.5b (Single Zone): Heating: 1 each - Duct Furnace, Gas, Capacity = 148 kBtu/h Proposed Efficiency = 80.00% Ec, Required Efficiency: 80.00 % Ec Cooling: 1 each - Single Package DX Unit, Capacity = 90 kBtu/h, Air-Cooled Condenser, Air Economizer Proposed Efficiency = 11.00 EER, Required Efficiency: 11.00 EER + 12.6 IEER

Quantity	System Type & Description
	Fan System: None
1	RTU-10a (Single Zone): Heating: 1 each - Duct Furnace, Gas, Capacity = 184 kBtu/h Proposed Efficiency = 80.00% Ec, Required Efficiency: 80.00 % Ec Cooling: 1 each - Single Package DX Unit, Capacity = 120 kBtu/h, Air-Cooled Condenser, Air Economizer Proposed Efficiency = 11.00 EER, Required Efficiency: 11.00 EER + 12.6 IEER Fan System: None
1	RTU-10b (Single Zone): Heating: 1 each - Duct Furnace, Gas, Capacity = 216 kBtu/h Proposed Efficiency = 80.00% Ec, Required Efficiency: 80.00 % Ec Cooling: 1 each - Single Package DX Unit, Capacity = 120 kBtu/h, Air-Cooled Condenser, Air Economizer Proposed Efficiency = 11.00 EER, Required Efficiency: 11.00 EER + 12.6 IEER Fan System: None
1	FC-1.5 (Single Zone): Split System Heat Pump Heating Mode: Capacity = 12 kBtu/h, Proposed Efficiency = 9.60 HSPF, Required Efficiency = 8.20 HSPF Cooling Mode: Capacity = 17 kBtu/h, Proposed Efficiency = 18.50 SEER, Required Efficiency: 14.00 SEER Fan System: None
1	FC-2.5 (Single Zone): Split System Heat Pump Heating Mode: Capacity = 18 kBtu/h, Proposed Efficiency = 10.80 HSPF, Required Efficiency = 8.20 HSPF Cooling Mode: Capacity = 30 kBtu/h, Proposed Efficiency = 18.00 SEER, Required Efficiency: 14.00 SEER Fan System: None
1	WM-3 (Single Zone): Split System Heat Pump Heating Mode: Capacity = 36 kBtu/h, Proposed Efficiency = 11.50 HSPF, Required Efficiency = 8.20 HSPF Cooling Mode: Capacity = 36 kBtu/h, Proposed Efficiency = 16.50 SEER, Required Efficiency: 14.00 SEER Fan System: None
1	FC-4 (Single Zone): Split System Heat Pump Heating Mode: Capacity = 21 kBtu/h, Proposed Efficiency = 10.30 HSPF, Required Efficiency = 8.20 HSPF Cooling Mode: Capacity = 48 kBtu/h, Proposed Efficiency = 17.40 SEER, Required Efficiency: 14.00 SEER Fan System: None
1	Water Heater 1: Electric Storage Water Heater, Capacity: 29 gallons w/ Circulation Pump Proposed Efficiency: 1.23 SL, %/h (if > 12 kW), Required Efficiency: 1.23 SL, %/h (if > 12 kW)
1	Water Heater 2: Electric Storage Water Heater, Capacity: 50 gallons w/ Circulation Pump Proposed Efficiency: 0.84 SL, %/h (if > 12 kW), Required Efficiency: 0.84 SL, %/h (if > 12 kW)

Mechanical Compliance Statement

Compliance Statement: The proposed mechanical design represented in this document is consistent with the building plans, specifications, and other calculations submitted with this permit application. The proposed mechanical systems have been designed to meet the 2018 IECC requirements in COM*check* Version 4.1.1.0 and to comply with any applicable mandatory requirements listed in the Inspection Checklist.

Name - Title	Signature	Date
Tre Presson		08/20/20

COM*check* Software Version 4.1.1.0

Inspection Checklist

Energy Code: 2018 IECC

Requirements: 3.0% were addressed directly in the COM*check* software

Text in the "Comments/Assumptions" column is provided by the user in the COMcheck Requirements screen. For each requirement, the user certifies that a code requirement will be met and how that is documented, or that an exception is being claimed. Where compliance is itemized in a separate table, a reference to that table is provided.

Section # & Req.ID	Plan Review	Complies?	Comments/Assumptions
C103.2 [PR2][1]	Plans, specifications, and/or calculations provide all information with which compliance can be determined for the mechanical systems and equipment and document where exceptions to the standard are claimed. Load calculations per acceptable engineering standards and handbooks.	☐Complies ☐Does Not ☐Not Observable ☐Not Applicable	
C103.2 [PR3][1]	Plans, specifications, and/or calculations provide all information with which compliance can be determined for the service water heating systems and equipment and document where exceptions to the standard are claimed. Hot water system sized per manufacturer's sizing guide.	☐Complies ☐Does Not ☐Not Observable ☐Not Applicable	
C406 [PR9][1]	Plans, specifications, and/or calculations provide all information with which compliance can be determined for the additional energy efficiency package options.	☐Complies ☐Does Not ☐Not Observable ☐Not Applicable	Requirement will be met.

Additional Comments/Assumptions:

1	High Impact (Tier 1)	2	Medium Impact (Tier 2)	3	Low Impact (Tier 3)

Section # & Req.ID	Footing / Foundation Inspection	Complies?	Comments/Assumptions
C403.12.2, C403.12.3 [FO9][3]	Snow/ice melting system and freeze protection systems have sensors and controls configured to limit service for pavement temperature and outdoor temperature. future connection to controls.	☐Complies ☐Does Not ☐Not Observable ☐Not Applicable	

Additional Comments/Assumptions:

1	High Impact (Tier 1)	2	Medium Impact (Tier 2)	3	Low Impact (Tier 3)

Section # & Req.ID	Plumbing Rough-In Inspection	Complies?	Comments/Assumptions
C404.5, C404.5.1, C404.5.2 [PL6][3]	Heated water supply piping conforms to pipe length and volume requirements. Refer to section details.	☐Complies ☐Does Not ☐Not Observable ☐Not Applicable	
C404.5, C404.5.1, C404.5.2 [PL6][3]	Heated water supply piping conforms to pipe length and volume requirements. Refer to section details.	☐Complies ☐Does Not ☐Not Observable ☐Not Applicable	
C404.5, C404.5.1, C404.5.2 [PL6][3]	Heated water supply piping conforms to pipe length and volume requirements. Refer to section details.	☐Complies ☐Does Not ☐Not Observable ☐Not Applicable	
C404.5, C404.5.1, C404.5.2 [PL6][3]	Heated water supply piping conforms to pipe length and volume requirements. Refer to section details.	☐Complies ☐Does Not ☐Not Observable ☐Not Applicable	
C404.5, C404.5.1, C404.5.2 [PL6][3]	Heated water supply piping conforms to pipe length and volume requirements. Refer to section details.	☐Complies ☐Does Not ☐Not Observable ☐Not Applicable	
C404.5, C404.5.1, C404.5.2 [PL6][3]	Heated water supply piping conforms to pipe length and volume requirements. Refer to section details.	☐Complies ☐Does Not ☐Not Observable ☐Not Applicable	
C404.5, C404.5.1, C404.5.2 [PL6][3]	Heated water supply piping conforms to pipe length and volume requirements. Refer to section details.	☐Complies ☐Does Not ☐Not Observable ☐Not Applicable	
C404.5, C404.5.1, C404.5.2 [PL6][3]	Heated water supply piping conforms to pipe length and volume requirements. Refer to section details.	☐Complies ☐Does Not ☐Not Observable ☐Not Applicable	
C404.5, C404.5.1, C404.5.2 [PL6][3]	Heated water supply piping conforms to pipe length and volume requirements. Refer to section details.	☐Complies ☐Does Not ☐Not Observable ☐Not Applicable	
C404.5, C404.5.1, C404.5.2 [PL6][3]	Heated water supply piping conforms to pipe length and volume requirements. Refer to section details.	☐Complies ☐Does Not ☐Not Observable ☐Not Applicable	
C404.5, C404.5.1, C404.5.2 [PL6][3]	Heated water supply piping conforms to pipe length and volume requirements. Refer to section details.	☐Complies ☐Does Not ☐Not Observable ☐Not Applicable	

1	High Impact (Tier 1)	2	Medium Impact (Tier 2)	3	Low Impact (Tier 3)

Section # & Req.ID	Plumbing Rough-In Inspection	Complies?	Comments/Assumptions
C404.5, C404.5.1, C404.5.2 [PL6][3]	Heated water supply piping conforms to pipe length and volume requirements. Refer to section details.	☐Complies ☐Does Not ☐Not Observable ☐Not Applicable	
C404.5, C404.5.1, C404.5.2 [PL6][3]	Heated water supply piping conforms to pipe length and volume requirements. Refer to section details.	☐Complies ☐Does Not ☐Not Observable ☐Not Applicable	
C404.5, C404.5.1, C404.5.2 [PL6][3]	Heated water supply piping conforms to pipe length and volume requirements. Refer to section details.	☐Complies ☐Does Not ☐Not Observable ☐Not Applicable	
C404.6.1, C404.6.2 [PL3][1]	Automatic time switches installed to automatically switch off the recirculating hot-water system or heat trace.	☐Complies ☐Does Not ☐Not Observable ☐Not Applicable	
C404.6.1, C404.6.2 [PL3][1]	Automatic time switches installed to automatically switch off the recirculating hot-water system or heat trace.	☐Complies ☐Does Not ☐Not Observable ☐Not Applicable	
C404.6.3 [PL7][3]	Pumps that circulate water between a heater and storage tank have controls that limit operation from startup to <= 5 minutes after end of heating cycle.	☐Complies ☐Does Not ☐Not Observable ☐Not Applicable	
C404.6.3 [PL7][3]	Pumps that circulate water between a heater and storage tank have controls that limit operation from startup to <= 5 minutes after end of heating cycle.	☐Complies ☐Does Not ☐Not Observable ☐Not Applicable	
C404.6.3 [PL7][3]	Pumps that circulate water between a heater and storage tank have controls that limit operation from startup to <= 5 minutes after end of heating cycle.	☐Complies ☐Does Not ☐Not Observable ☐Not Applicable	
C404.6.3 [PL7][3]	Pumps that circulate water between a heater and storage tank have controls that limit operation from startup to <= 5 minutes after end of heating cycle.	☐Complies ☐Does Not ☐Not Observable ☐Not Applicable	
C404.6.3 [PL7][3]	Pumps that circulate water between a heater and storage tank have controls that limit operation from startup to <= 5 minutes after end of heating cycle.	☐Complies ☐Does Not ☐Not Observable ☐Not Applicable	
C404.6.3 [PL7][3]	Pumps that circulate water between a heater and storage tank have controls that limit operation from startup to <= 5 minutes after end of heating cycle.	☐Complies ☐Does Not ☐Not Observable ☐Not Applicable	
C404.6.3 [PL7][3]	Pumps that circulate water between a heater and storage tank have controls that limit operation from startup to <= 5 minutes after end of heating cycle.	☐Complies ☐Does Not ☐Not Observable ☐Not Applicable	

1	High Impact (Tier 1)	2	Medium Impact (Tier 2)	3	Low Impact (Tier 3)

Section # & Req.ID	Plumbing Rough-In Inspection	Complies?	Comments/Assumptions
C404.6.3 [PL7][3]	Pumps that circulate water between a heater and storage tank have controls that limit operation from startup to <= 5 minutes after end of heating cycle.	☐Complies ☐Does Not ☐Not Observable ☐Not Applicable	
C404.6.3 [PL7][3]	Pumps that circulate water between a heater and storage tank have controls that limit operation from startup to <= 5 minutes after end of heating cycle.	☐Complies ☐Does Not ☐Not Observable ☐Not Applicable	
C404.6.3 [PL7][3]	Pumps that circulate water between a heater and storage tank have controls that limit operation from startup to <= 5 minutes after end of heating cycle.	☐Complies ☐Does Not ☐Not Observable ☐Not Applicable	
C404.6.3 [PL7][3]	Pumps that circulate water between a heater and storage tank have controls that limit operation from startup to <= 5 minutes after end of heating cycle.	☐Complies ☐Does Not ☐Not Observable ☐Not Applicable	
C404.6.3 [PL7][3]	Pumps that circulate water between a heater and storage tank have controls that limit operation from startup to <= 5 minutes after end of heating cycle.	☐Complies ☐Does Not ☐Not Observable ☐Not Applicable	
C404.6.3 [PL7][3]	Pumps that circulate water between a heater and storage tank have controls that limit operation from startup to <= 5 minutes after end of heating cycle.	☐Complies ☐Does Not ☐Not Observable ☐Not Applicable	
C404.6.3 [PL7][3]	Pumps that circulate water between a heater and storage tank have controls that limit operation from startup to <= 5 minutes after end of heating cycle.	☐Complies ☐Does Not ☐Not Observable ☐Not Applicable	
C404.7 [PL8][3]	Demand recirculation water systems have controls that start the pump upon receiving a signal from the action of a user of a fixture or appliance and limits the temperature of the water entering the cold-water piping to 104°F.	☐Complies ☐Does Not ☐Not Observable ☐Not Applicable	
C404.7 [PL8][3]	Demand recirculation water systems have controls that start the pump upon receiving a signal from the action of a user of a fixture or appliance and limits the temperature of the water entering the cold-water piping to 104°F.	☐Complies ☐Does Not ☐Not Observable ☐Not Applicable	
C404.7 [PL8][3]	Demand recirculation water systems have controls that start the pump upon receiving a signal from the action of a user of a fixture or appliance and limits the temperature of the water entering the cold-water piping to 104°F.	☐Complies ☐Does Not ☐Not Observable ☐Not Applicable	
C404.7 [PL8][3]	Demand recirculation water systems have controls that start the pump upon receiving a signal from the action of a user of a fixture or appliance and limits the temperature of the water entering the cold-water piping to 104°F.	☐Complies ☐Does Not ☐Not Observable ☐Not Applicable	

1	High Impact (Tier 1)	2	Medium Impact (Tier 2)	3	Low Impact (Tier 3)

Section # & Req.ID	Plumbing Rough-In Inspection	Complies?	Comments/Assumptions
C404.7 [PL8][3]	Demand recirculation water systems have controls that start the pump upon receiving a signal from the action of a user of a fixture or appliance and limits the temperature of the water entering the cold-water piping to 104°F.	☐Complies ☐Does Not ☐Not Observable ☐Not Applicable	
C404.7 [PL8][3]	Demand recirculation water systems have controls that start the pump upon receiving a signal from the action of a user of a fixture or appliance and limits the temperature of the water entering the cold-water piping to 104°F.	☐Complies ☐Does Not ☐Not Observable ☐Not Applicable	
C404.7 [PL8][3]	Demand recirculation water systems have controls that start the pump upon receiving a signal from the action of a user of a fixture or appliance and limits the temperature of the water entering the cold-water piping to 104°F.	☐Complies ☐Does Not ☐Not Observable ☐Not Applicable	
C404.7 [PL8][3]	Demand recirculation water systems have controls that start the pump upon receiving a signal from the action of a user of a fixture or appliance and limits the temperature of the water entering the cold-water piping to 104°F.	☐Complies ☐Does Not ☐Not Observable ☐Not Applicable	
C404.7 [PL8][3]	Demand recirculation water systems have controls that start the pump upon receiving a signal from the action of a user of a fixture or appliance and limits the temperature of the water entering the cold-water piping to 104°F.	☐Complies ☐Does Not ☐Not Observable ☐Not Applicable	
C404.7 [PL8][3]	Demand recirculation water systems have controls that start the pump upon receiving a signal from the action of a user of a fixture or appliance and limits the temperature of the water entering the cold-water piping to 104°F.	☐Complies ☐Does Not ☐Not Observable ☐Not Applicable	
C404.7 [PL8][3]	Demand recirculation water systems have controls that start the pump upon receiving a signal from the action of a user of a fixture or appliance and limits the temperature of the water entering the cold-water piping to 104°F.	☐Complies ☐Does Not ☐Not Observable ☐Not Applicable	
C404.7 [PL8][3]	Demand recirculation water systems have controls that start the pump upon receiving a signal from the action of a user of a fixture or appliance and limits the temperature of the water entering the cold-water piping to 104°F.	☐Complies ☐Does Not ☐Not Observable ☐Not Applicable	
C404.7 [PL8][3]	Demand recirculation water systems have controls that start the pump upon receiving a signal from the action of a user of a fixture or appliance and limits the temperature of the water entering the cold-water piping to 104°F.	☐Complies ☐Does Not ☐Not Observable ☐Not Applicable	

1	High Impact (Tier 1)	2	Medium Impact (Tier 2)	3	Low Impact (Tier 3)

Section # & Req.ID	Plumbing Rough-In Inspection	Complies?	Comments/Assumptions
C404.7 [PL8][3]	Demand recirculation water systems have controls that start the pump upon receiving a signal from the action of a user of a fixture or appliance and limits the temperature of the water entering the cold-water piping to 104°F.	☐Complies ☐Does Not ☐Not Observable ☐Not Applicable	

Additional Comments/Assumptions:

1	High Impact (Tier 1)	2	Medium Impact (Tier 2)	3	Low Impact (Tier 3)

Section # & Req.ID	Mechanical Rough-In Inspection	Complies?	Comments/Assumptions
C402.2.6 [ME41][3]	Thermally ineffective panel surfaces of sensible heating panels have insulation >= R-3.5.	☐Complies ☐Does Not ☐Not Observable ☐Not Applicable	
C403.11.3 [ME61][2]	HVAC piping insulation insulated in accordance with Table C403.11.3. Insulation exposed to weather is protected from damage and is provided with shielding from solar radiation.	☐Complies ☐Does Not ☐Not Observable ☐Not Applicable	
C403.11.3 [ME61][2]	HVAC piping insulation insulated in accordance with Table C403.11.3. Insulation exposed to weather is protected from damage and is provided with shielding from solar radiation.	☐Complies ☐Does Not ☐Not Observable ☐Not Applicable	
C403.11.3 [ME61][2]	HVAC piping insulation insulated in accordance with Table C403.11.3. Insulation exposed to weather is protected from damage and is provided with shielding from solar radiation.	☐Complies ☐Does Not ☐Not Observable ☐Not Applicable	
C403.11.3 [ME61][2]	HVAC piping insulation insulated in accordance with Table C403.11.3. Insulation exposed to weather is protected from damage and is provided with shielding from solar radiation.	☐Complies ☐Does Not ☐Not Observable ☐Not Applicable	
C403.8.1 [ME65][3]	HVAC fan systems at design conditions do not exceed allowable fan system motor nameplate hp or fan system bhp.	☐Complies ☐Does Not ☐Not Observable ☐Not Applicable	*See the Mechanical Systems list for values.*
C403.8.1 [ME65][3]	HVAC fan systems at design conditions do not exceed allowable fan system motor nameplate hp or fan system bhp.	☐Complies ☐Does Not ☐Not Observable ☐Not Applicable	*See the Mechanical Systems list for values.*
C403.8.1 [ME65][3]	HVAC fan systems at design conditions do not exceed allowable fan system motor nameplate hp or fan system bhp.	☐Complies ☐Does Not ☐Not Observable ☐Not Applicable	*See the Mechanical Systems list for values.*
C403.8.1 [ME65][3]	HVAC fan systems at design conditions do not exceed allowable fan system motor nameplate hp or fan system bhp.	☐Complies ☐Does Not ☐Not Observable ☐Not Applicable	*See the Mechanical Systems list for values.*
C403.8.1 [ME65][3]	HVAC fan systems at design conditions do not exceed allowable fan system motor nameplate hp or fan system bhp.	☐Complies ☐Does Not ☐Not Observable ☐Not Applicable	*See the Mechanical Systems list for values.*
C403.8.1 [ME65][3]	HVAC fan systems at design conditions do not exceed allowable fan system motor nameplate hp or fan system bhp.	☐Complies ☐Does Not ☐Not Observable ☐Not Applicable	*See the Mechanical Systems list for values.*
C403.8.1 [ME65][3]	HVAC fan systems at design conditions do not exceed allowable fan system motor nameplate hp or fan system bhp.	☐Complies ☐Does Not ☐Not Observable ☐Not Applicable	*See the Mechanical Systems list for values.*

1	High Impact (Tier 1)	2	Medium Impact (Tier 2)	3	Low Impact (Tier 3)

Section # & Req.ID	Mechanical Rough-In Inspection	Complies?	Comments/Assumptions
C403.8.1 [ME65]^3	HVAC fan systems at design conditions do not exceed allowable fan system motor nameplate hp or fan system bhp.	☐Complies ☐Does Not ☐Not Observable ☐Not Applicable	*See the Mechanical Systems list for values.*
C403.8.1 [ME65]^3	HVAC fan systems at design conditions do not exceed allowable fan system motor nameplate hp or fan system bhp.	☐Complies ☐Does Not ☐Not Observable ☐Not Applicable	*See the Mechanical Systems list for values.*
C403.8.1 [ME65]^3	HVAC fan systems at design conditions do not exceed allowable fan system motor nameplate hp or fan system bhp.	☐Complies ☐Does Not ☐Not Observable ☐Not Applicable	*See the Mechanical Systems list for values.*
C403.8.1 [ME65]^3	HVAC fan systems at design conditions do not exceed allowable fan system motor nameplate hp or fan system bhp.	☐Complies ☐Does Not ☐Not Observable ☐Not Applicable	*See the Mechanical Systems list for values.*
C403.8.1 [ME65]^3	HVAC fan systems at design conditions do not exceed allowable fan system motor nameplate hp or fan system bhp.	☐Complies ☐Does Not ☐Not Observable ☐Not Applicable	*See the Mechanical Systems list for values.*
C403.8.3 [ME117]^2	Fans have efficiency grade (FEG) >= 67. The total efficiency of the fan at the design point of operation <= 15% of maximum total efficiency of the fan.	☐Complies ☐Does Not ☐Not Observable ☐Not Applicable	
C403.8.3 [ME117]^2	Fans have efficiency grade (FEG) >= 67. The total efficiency of the fan at the design point of operation <= 15% of maximum total efficiency of the fan.	☐Complies ☐Does Not ☐Not Observable ☐Not Applicable	
C403.8.3 [ME117]^2	Fans have efficiency grade (FEG) >= 67. The total efficiency of the fan at the design point of operation <= 15% of maximum total efficiency of the fan.	☐Complies ☐Does Not ☐Not Observable ☐Not Applicable	
C403.8.3 [ME117]^2	Fans have efficiency grade (FEG) >= 67. The total efficiency of the fan at the design point of operation <= 15% of maximum total efficiency of the fan.	☐Complies ☐Does Not ☐Not Observable ☐Not Applicable	
C403.8.3 [ME117]^2	Fans have efficiency grade (FEG) >= 67. The total efficiency of the fan at the design point of operation <= 15% of maximum total efficiency of the fan.	☐Complies ☐Does Not ☐Not Observable ☐Not Applicable	
C403.8.3 [ME117]^2	Fans have efficiency grade (FEG) >= 67. The total efficiency of the fan at the design point of operation <= 15% of maximum total efficiency of the fan.	☐Complies ☐Does Not ☐Not Observable ☐Not Applicable	
C403.8.3 [ME117]^2	Fans have efficiency grade (FEG) >= 67. The total efficiency of the fan at the design point of operation <= 15% of maximum total efficiency of the fan.	☐Complies ☐Does Not ☐Not Observable ☐Not Applicable	

1	High Impact (Tier 1)	2	Medium Impact (Tier 2)	3	Low Impact (Tier 3)

Section # & Req.ID	Mechanical Rough-In Inspection	Complies?	Comments/Assumptions
C403.8.3 [ME117][2]	Fans have efficiency grade (FEG) >= 67. The total efficiency of the fan at the design point of operation <= 15% of maximum total efficiency of the fan.	☐Complies ☐Does Not ☐Not Observable ☐Not Applicable	
C403.8.3 [ME117][2]	Fans have efficiency grade (FEG) >= 67. The total efficiency of the fan at the design point of operation <= 15% of maximum total efficiency of the fan.	☐Complies ☐Does Not ☐Not Observable ☐Not Applicable	
C403.8.3 [ME117][2]	Fans have efficiency grade (FEG) >= 67. The total efficiency of the fan at the design point of operation <= 15% of maximum total efficiency of the fan.	☐Complies ☐Does Not ☐Not Observable ☐Not Applicable	
C403.8.3 [ME117][2]	Fans have efficiency grade (FEG) >= 67. The total efficiency of the fan at the design point of operation <= 15% of maximum total efficiency of the fan.	☐Complies ☐Does Not ☐Not Observable ☐Not Applicable	
C403.8.3 [ME117][2]	Fans have efficiency grade (FEG) >= 67. The total efficiency of the fan at the design point of operation <= 15% of maximum total efficiency of the fan.	☐Complies ☐Does Not ☐Not Observable ☐Not Applicable	
C403.12.1 [ME71][2]	Systems that heat outside the building envelope are radiant heat systems controlled by an occupancy sensing device or timer switch.	☐Complies ☐Does Not ☐Not Observable ☐Not Applicable	
C403.2.3 [ME55][2]	HVAC equipment efficiency verified.	☐Complies ☐Does Not ☐Not Observable ☐Not Applicable	*See the Mechanical Systems list for values.*
C403.2.2 [ME59][1]	Natural or mechanical ventilation is provided in accordance with International Mechanical Code Chapter 4. Mechanical ventilation has capability to reduce outdoor air supply to minimum per IMC Chapter 4.	☐Complies ☐Does Not ☐Not Observable ☐Not Applicable	
C403.7.1 [ME59][1]	Demand control ventilation provided for spaces >500 ft2 and >25 people/1000 ft2 occupant density and served by systems with air side economizer, auto modulating outside air damper control, or design airflow >3,000 cfm.	☐Complies ☐Does Not ☐Not Observable ☐Not Applicable	
C403.7.2 [ME115][3]	Enclosed parking garage ventilation has automatic contaminant detection and capacity to stage or modulate fans to 50% or less of design capacity.	☐Complies ☐Does Not ☐Not Observable ☐Not Applicable	
C403.7.6 [ME141][3]	HVAC systems serving guestrooms in Group R-1 buildings with > 50 guestrooms: Each guestroom is provided with controls that automatically manage temperature setpoint and ventilation (see sections C403.7.6.1 and C403.7.6.2).	☐Complies ☐Does Not ☐Not Observable ☐Not Applicable	

1	High Impact (Tier 1)	2	Medium Impact (Tier 2)	3	Low Impact (Tier 3)

Section # & Req.ID	Mechanical Rough-In Inspection	Complies?	Comments/Assumptions
C403.7.4 [ME57][1]	Exhaust air energy recovery on systems meeting Table C403.7.4(1) and C403.7.4(2).	☐Complies ☐Does Not ☐Not Observable ☐Not Applicable	
C403.7.5 [ME116][3]	Kitchen exhaust systems comply with replacement air and conditioned supply air limitations, and satisfy hood rating requirements and maximum exhaust rate criteria.	☐Complies ☐Does Not ☐Not Observable ☐Not Applicable	
C403.11.1 , C403.11.2 [ME60][2]	HVAC ducts and plenums insulated in accordance with C403.11.1 and constructed in accordance with C403.11.2, verification may need to occur during Foundation Inspection.	☐Complies ☐Does Not ☐Not Observable ☐Not Applicable	
C403.4.3.3.2 [ME121][3]	Closed-circuit cooling tower within heat pump loop have either automatic bypass valve or lower leakage positive closure dampers. Open-circuit tower within heat pump loop have automatic valve to bypass all heat pump water flow around the tower. Open- or closed-circuit cooling towers used in conjunction with a separate heat exchanger have heat loss by shutting down the circulation pump on the cooling tower loop. Open- or closed circuit cooling towers have a separate heat exchanger to isolate the cooling tower from the heat pump loop, and heat loss is controlled by shutting down the circulation pump on the cooling tower loop.	☐Complies ☐Does Not ☐Not Observable ☐Not Applicable	
C403.4.3.3.2 [ME121][3]	Closed-circuit cooling tower within heat pump loop have either automatic bypass valve or lower leakage positive closure dampers. Open-circuit tower within heat pump loop have automatic valve to bypass all heat pump water flow around the tower. Open- or closed-circuit cooling towers used in conjunction with a separate heat exchanger have heat loss by shutting down the circulation pump on the cooling tower loop. Open- or closed circuit cooling towers have a separate heat exchanger to isolate the cooling tower from the heat pump loop, and heat loss is controlled by shutting down the circulation pump on the cooling tower loop.	☐Complies ☐Does Not ☐Not Observable ☐Not Applicable	

1	High Impact (Tier 1)	2	Medium Impact (Tier 2)	3	Low Impact (Tier 3)

Section # & Req.ID	Mechanical Rough-In Inspection	Complies?	Comments/Assumptions
C403.4.3.3.2 [ME121][3]	Closed-circuit cooling tower within heat pump loop have either automatic bypass valve or lower leakage positive closure dampers. Open-circuit tower within heat pump loop have automatic valve to bypass all heat pump water flow around the tower. Open- or closed-circuit cooling towers used in conjunction with a separate heat exchanger have heat loss by shutting down the circulation pump on the cooling tower loop. Open- or closed circuit cooling towers have a separate heat exchanger to isolate the cooling tower from the heat pump loop, and heat loss is controlled by shutting down the circulation pump on the cooling tower loop.	☐Complies ☐Does Not ☐Not Observable ☐Not Applicable	
C403.4.3.3.2 [ME121][3]	Closed-circuit cooling tower within heat pump loop have either automatic bypass valve or lower leakage positive closure dampers. Open-circuit tower within heat pump loop have automatic valve to bypass all heat pump water flow around the tower. Open- or closed-circuit cooling towers used in conjunction with a separate heat exchanger have heat loss by shutting down the circulation pump on the cooling tower loop. Open- or closed circuit cooling towers have a separate heat exchanger to isolate the cooling tower from the heat pump loop, and heat loss is controlled by shutting down the circulation pump on the cooling tower loop.	☐Complies ☐Does Not ☐Not Observable ☐Not Applicable	
C403.4.1.4 [ME63][2]	Heating for vestibules and air curtains with integral heating include automatic controls that shut off the heating system when outdoor air temperatures > 45F. Vestibule heating and cooling systems controlled by a thermostat in the vestibule with heating setpoint <= 60F and cooling setpoint >= 80F.	☐Complies ☐Does Not ☐Not Observable ☐Not Applicable	
C403.3.3 [ME35][1]	Hot gas bypass limited to: <=240 kBtu/h – 50% >240 kBtu/h – 25%	☐Complies ☐Does Not ☐Not Observable ☐Not Applicable	
C403.3.3 [ME35][1]	Hot gas bypass limited to: <=240 kBtu/h – 50% >240 kBtu/h – 25%	☐Complies ☐Does Not ☐Not Observable ☐Not Applicable	
C403.3.3 [ME35][1]	Hot gas bypass limited to: <=240 kBtu/h – 50% >240 kBtu/h – 25%	☐Complies ☐Does Not ☐Not Observable ☐Not Applicable	
C403.3.3 [ME35][1]	Hot gas bypass limited to: <=240 kBtu/h – 50% >240 kBtu/h – 25%	☐Complies ☐Does Not ☐Not Observable ☐Not Applicable	

1	High Impact (Tier 1)	2	Medium Impact (Tier 2)	3	Low Impact (Tier 3)

Section # & Req.ID	Mechanical Rough-In Inspection	Complies?	Comments/Assumptions
C403.3.3 [ME35][1]	Hot gas bypass limited to: <=240 kBtu/h – 50% >240 kBtu/h – 25%	☐Complies ☐Does Not ☐Not Observable ☐Not Applicable	
C403.3.3 [ME35][1]	Hot gas bypass limited to: <=240 kBtu/h – 50% >240 kBtu/h – 25%	☐Complies ☐Does Not ☐Not Observable ☐Not Applicable	
C403.3.3 [ME35][1]	Hot gas bypass limited to: <=240 kBtu/h – 50% >240 kBtu/h – 25%	☐Complies ☐Does Not ☐Not Observable ☐Not Applicable	
C403.3.3 [ME35][1]	Hot gas bypass limited to: <=240 kBtu/h – 50% >240 kBtu/h – 25%	☐Complies ☐Does Not ☐Not Observable ☐Not Applicable	
C408.2.2.1 [ME53][3]	Air outlets and zone terminal devices have means for air balancing.	☐Complies ☐Does Not ☐Not Observable ☐Not Applicable	
C403.5, C403.5.1, C403.5.2 [ME123][3]	Refrigerated display cases, walk-in coolers or walk-in freezers served by remote compressors and remote condensers not located in a condensing unit, have fan-powered condensers that comply with Sections C403.5.1 and refrigeration compressor systems that comply with C403.5.2..	☐Complies ☐Does Not ☐Not Observable ☐Not Applicable	

Additional Comments/Assumptions:

1	High Impact (Tier 1)	2	Medium Impact (Tier 2)	3	Low Impact (Tier 3)

Section # & Req.ID	Rough-In Electrical Inspection	Complies?	Comments/Assumptions
C405.6 [EL26][2]	Low-voltage dry-type distribution electric transformers meet the minimum efficiency requirements of Table C405.6.	☐Complies ☐Does Not ☐Not Observable ☐Not Applicable	Requirement will be met.
C405.7 [EL27][2]	Electric motors meet the minimum efficiency requirements of Tables C405.7(1) through C405.7(4). Efficiency verified through certification under an approved certification program or the equipment efficiency ratings shall be provided by motor manufacturer (where certification programs do not exist).	☐Complies ☐Does Not ☐Not Observable ☐Not Applicable	Requirement will be met.
C405.8.2, C405.8.2.1 [EL28][2]	Escalators and moving walks comply with ASME A17.1/CSA B44 and have automatic controls configured to reduce speed to the minimum permitted speed in accordance with ASME A17.1/CSA B44 or applicable local code when not conveying passengers.	☐Complies ☐Does Not ☐Not Observable ☐Not Applicable	Requirement will be met.
C405.9 [EL29][2]	Total voltage drop across the combination of feeders and branch circuits <= 5%.	☐Complies ☐Does Not ☐Not Observable ☐Not Applicable	Requirement will be met.

Additional Comments/Assumptions:

1	High Impact (Tier 1)	2	Medium Impact (Tier 2)	3	Low Impact (Tier 3)

Section # & Req.ID	Final Inspection	Complies?	Comments/Assumptions
C303.3, C408.2.5.3 [FI8][3]	Furnished O&M manuals for HVAC systems within 90 days of system acceptance.	☐Complies ☐Does Not ☐Not Observable ☐Not Applicable	
C403.2.2 [FI27][3]	HVAC systems and equipment capacity does not exceed calculated loads.	☐Complies ☐Does Not ☐Not Observable ☐Not Applicable	
C403.2.4.1 [FI47][3]	Heating and cooling to each zone is controlled by a thermostat control. Minimum one humidity control device per installed humidification/dehumidification system.	☐Complies ☐Does Not ☐Not Observable ☐Not Applicable	
C403.2.4.1 [FI47][3]	Heating and cooling to each zone is controlled by a thermostat control. Minimum one humidity control device per installed humidification/dehumidification system.	☐Complies ☐Does Not ☐Not Observable ☐Not Applicable	
C403.2.4.1 [FI47][3]	Heating and cooling to each zone is controlled by a thermostat control. Minimum one humidity control device per installed humidification/dehumidification system.	☐Complies ☐Does Not ☐Not Observable ☐Not Applicable	
C403.2.4.1 [FI47][3]	Heating and cooling to each zone is controlled by a thermostat control. Minimum one humidity control device per installed humidification/dehumidification system.	☐Complies ☐Does Not ☐Not Observable ☐Not Applicable	
C403.2.4.1 [FI47][3]	Heating and cooling to each zone is controlled by a thermostat control. Minimum one humidity control device per installed humidification/dehumidification system.	☐Complies ☐Does Not ☐Not Observable ☐Not Applicable	
C403.2.4.1 [FI47][3]	Heating and cooling to each zone is controlled by a thermostat control. Minimum one humidity control device per installed humidification/dehumidification system.	☐Complies ☐Does Not ☐Not Observable ☐Not Applicable	
C403.2.4.1 [FI47][3]	Heating and cooling to each zone is controlled by a thermostat control. Minimum one humidity control device per installed humidification/dehumidification system.	☐Complies ☐Does Not ☐Not Observable ☐Not Applicable	
C403.2.4.1 [FI47][3]	Heating and cooling to each zone is controlled by a thermostat control. Minimum one humidity control device per installed humidification/dehumidification system.	☐Complies ☐Does Not ☐Not Observable ☐Not Applicable	

1	High Impact (Tier 1)	2	Medium Impact (Tier 2)	3	Low Impact (Tier 3)

Section # & Req.ID	Final Inspection	Complies?	Comments/Assumptions
C403.2.4.1 [FI47][3]	Heating and cooling to each zone is controlled by a thermostat control. Minimum one humidity control device per installed humidification/dehumidification system.	☐Complies ☐Does Not ☐Not Observable ☐Not Applicable	
C403.2.4.1 [FI47][3]	Heating and cooling to each zone is controlled by a thermostat control. Minimum one humidity control device per installed humidification/dehumidification system.	☐Complies ☐Does Not ☐Not Observable ☐Not Applicable	
C403.2.4.1 [FI47][3]	Heating and cooling to each zone is controlled by a thermostat control. Minimum one humidity control device per installed humidification/dehumidification system.	☐Complies ☐Does Not ☐Not Observable ☐Not Applicable	
C403.2.4.1 [FI47][3]	Heating and cooling to each zone is controlled by a thermostat control. Minimum one humidity control device per installed humidification/dehumidification system.	☐Complies ☐Does Not ☐Not Observable ☐Not Applicable	
C403.2.4.1.1 [FI42][3]	Heat pump controls prevent supplemental electric resistance heat from coming on when not needed.	☐Complies ☐Does Not ☐Not Observable ☐Not Applicable	
C403.2.4.1.1 [FI42][3]	Heat pump controls prevent supplemental electric resistance heat from coming on when not needed.	☐Complies ☐Does Not ☐Not Observable ☐Not Applicable	
C403.2.4.1.1 [FI42][3]	Heat pump controls prevent supplemental electric resistance heat from coming on when not needed.	☐Complies ☐Does Not ☐Not Observable ☐Not Applicable	
C403.2.4.1.1 [FI42][3]	Heat pump controls prevent supplemental electric resistance heat from coming on when not needed.	☐Complies ☐Does Not ☐Not Observable ☐Not Applicable	
C403.4.1.2 [FI38][3]	Thermostatic controls have a 5 °F deadband.	☐Complies ☐Does Not ☐Not Observable ☐Not Applicable	
C403.2.4.1.3 [FI20][3]	Temperature controls have setpoint overlap restrictions.	☐Complies ☐Does Not ☐Not Observable ☐Not Applicable	
C403.2.4.2 [FI39][3]	Each zone equipped with setback controls using automatic time clock or programmable control system.	☐Complies ☐Does Not ☐Not Observable ☐Not Applicable	

1	High Impact (Tier 1)	2	Medium Impact (Tier 2)	3	Low Impact (Tier 3)

Section # & Req.ID	Final Inspection	Complies?	Comments/Assumptions
C403.2.4.2.1, C403.2.4.2.2 [FI40][3]	Automatic Controls: Setback to 55°F (heat) and 85°F (cool); 7-day clock, 2-hour occupant override, 10-hour backup	☐Complies ☐Does Not ☐Not Observable ☐Not Applicable	
C404.3 [FI11][3]	Heat traps installed on supply and discharge piping of non-circulating systems.	☐Complies ☐Does Not ☐Not Observable ☐Not Applicable	
C404.3 [FI11][3]	Heat traps installed on supply and discharge piping of non-circulating systems.	☐Complies ☐Does Not ☐Not Observable ☐Not Applicable	
C404.4 [FI25][2]	All piping insulated in accordance with section details and Table C403.11.3.	☐Complies ☐Does Not ☐Not Observable ☐Not Applicable	
C404.4 [FI25][2]	All piping insulated in accordance with section details and Table C403.11.3.	☐Complies ☐Does Not ☐Not Observable ☐Not Applicable	
C404.6.1 [FI12][3]	Controls are installed that limit the operation of a recirculation pump installed to maintain temperature of a storage tank. System return pipe is a dedicated return pipe or a cold water supply pipe.	☐Complies ☐Does Not ☐Not Observable ☐Not Applicable	
C404.6.1 [FI12][3]	Controls are installed that limit the operation of a recirculation pump installed to maintain temperature of a storage tank. System return pipe is a dedicated return pipe or a cold water supply pipe.	☐Complies ☐Does Not ☐Not Observable ☐Not Applicable	
C408.1.1 [FI57][1]	Building operations and maintenance documents will be provided to the owner. Documents will cover manufacturers' information, specifications, programming procedures and means of illustrating to owner how building, equipment and systems are intended to be installed, maintained, and operated.	☐Complies ☐Does Not ☐Not Observable ☐Not Applicable	Requirement will be met.
C408.2.1 [FI28][1]	Commissioning plan developed by registered design professional or approved agency.	☐Complies ☐Does Not ☐Not Observable ☐Not Applicable	
C408.2.3.1 [FI31][1]	HVAC equipment has been tested to ensure proper operation.	☐Complies ☐Does Not ☐Not Observable ☐Not Applicable	
C408.2.3.2 [FI10][1]	HVAC control systems have been tested to ensure proper operation, calibration and adjustment of controls.	☐Complies ☐Does Not ☐Not Observable ☐Not Applicable	

1	High Impact (Tier 1)	2	Medium Impact (Tier 2)	3	Low Impact (Tier 3)

Section # & Req.ID	Final Inspection	Complies?	Comments/Assumptions
C408.2.4 [FI29][1]	Preliminary commissioning report completed and certified by registered design professional or approved agency.	☐Complies ☐Does Not ☐Not Observable ☐Not Applicable	
C408.2.5.1 [FI7][3]	Furnished HVAC as-built drawings submitted within 90 days of system acceptance.	☐Complies ☐Does Not ☐Not Observable ☐Not Applicable	
C408.2.5.3 [FI43][1]	An air and/or hydronic system balancing report is provided for HVAC systems.	☐Complies ☐Does Not ☐Not Observable ☐Not Applicable	
C408.2.5.4 [FI30][1]	Final commissioning report due to building owner within 90 days of receipt of certificate of occupancy.	☐Complies ☐Does Not ☐Not Observable ☐Not Applicable	

Additional Comments/Assumptions:

1	High Impact (Tier 1)	2	Medium Impact (Tier 2)	3	Low Impact (Tier 3)